PIONEER
The Art of Entertainment

Service Manual

ORDER NO.
CRT1384

MULTI-CD CONTROL FM/MW/LW TUNER DECK

KEX-M830RDS EW

Note:

- **See the service manual CX-175 (CRT1276) for the cassette mechanism description.**
- **Dolby noise reduction manufactured under license from Dolby Laboratories Licensing Corporation. "Dolby" and the double-D symbol are trademarks of Dolby Laboratories Licensing Corporation.**

CONTENTS

1. SPECIFICATIONS·····2
2. CONNECTION·····2
3. DISASSEMBLY·····3
4. USING THE REMOVABLE FRONT PANEL·····5
5. ADJUSTING VOLUME AND TONE·····6
6. USING THE TUNER·····8
7. USING THE RDS FUNCTION·····10
8. USING THE TAPE DECK·····11
9. USING THE REMOTE CONTROL·····13
10. USING THE CLOCK DISPLAY·····14
11. PLAYING COMPACT DISCS·····14
12. CIRCUIT DESCRIOTION·····17
13. ADJUSTMENT·····20
14. SCHEMATIC CIRCUIT DIAGRAM·····40
15. CONNECTION DIAGRAM·····43
16. CIRCUIT DIAGRAM AND P. C. BOARDS PATTERN·····46
17. CHASSIS EXPLODED VIEW(1)·····61
18. CHASSIS EXPLODED VIEW(2)·····64
19. CASSETTE MECHANISM ASSY EXPLODED VIEW·····67
20. PACKING METHOD·····71
21. ELECTRICAL PARTS LIST·····72

PIONEER ELECTRONIC CORPORATION 4-1, Meguro 1-Chome, Meguro-ku, Tokyo 153, Japan
PIONEER ELECTRONICS SERVICE INC. P.O. Box 1760, Long Beach, California 90801 U.S.A.
PIONEER ELECTRONICS OF CANADA, INC. 505 Cochrane Drive, Markham, Ontario L3R 8E3 Canada
PIONEER ELECTRONIC [EUROPE] N.V. Keetberglaan 1, 2740 Beveren, Belgium
PIONEER ELECTRONICS AUSTRALIA PTY. LTD. 178-184 Boundary Road, Braeside, Victoria 3195, Australia TEL: [03] 580-9911

© PIONEER ELECTRONIC CORPORATION 1991

ED MAY 1991 Printed in Japan

1. SPECIFICATIONS

General

Power source ..... 14.4 V DC (10.8 – 15.6 V allowable)
Grounding system ..... Negative type
Max. current consumption ..... 3.2 A
Dimensions (chassis) ..... 180 (W) x 50 (H) x 155 (D) mm
(front face) ..... 188 (W) x 58 (H) x 18 (D) mm
Weight ..... 1.7 kg
Tone controls (bass) ..... ±10 dB (100 Hz)
(middle) ..... ±10 dB (1 kHz)
(treble) ..... ±10 dB (10 kHz)
Loudness contour ..... +12 dB (100 Hz), +7 dB (10 kHz)
(Volume: –30 dB)
Sub-woofer
Crossover frequency ..... 50 Hz/80 Hz/120 Hz
Crossover slope ..... –12 dB/octave
Output gain ..... ±12 dB
Nominal output level/
output impendance (pre out) ..... 500 mV/1 kΩ

Tape player

Tape ..... Compact cassette tape (C-30 – C-90)
Tape speed ..... 4.76 cm/sec. (+0.14 cm/sec., –0.05 cm/sec.)
Fast forward/rewind time ..... Approx. 100 sec. for C-60
Wow & flutter ..... 0.08 % (WRMS)
Frequency response ..... Metal: 25 – 22,000 Hz (±3 dB)
Stereo separation ..... 45 dB
Signal-to-noise ratio
..... Metal: Dolby C NR IN: 72 dB (IEC-A network)
Dolby B NR IN: 67 dB (IEC-A network)
Dolby NR OUT: 61 dB (IEC-A network)

FM tuner

Frequency range ..... 87.5 – 108 MHz
Usable sensitivity ..... 8 dBf (0.7 µV/75 Ω, mono)
50 dB quieting sensitivity ..... 13 dBf (1.2 µV/75 Ω, mono)
Signal-to-noise-ratio ..... 70 dB (IEC-A network)
Distortion ..... 0.3 % (at 65 dBf, 1 kHz, stereo)
Frequency response ..... 25 – 15,000 Hz (±3 dB)
Stereo separation ..... 40 dB (at 65 dBf, 1 kHz)

MW tuner

Frequency range ..... 531 – 1,602 kHz
Usable sensitivity ..... 18 µV (25 dB) (S/N: 20 dB)
Selectivity ..... 50 dB (±9 kHz)

LW tuner

Frequency range ..... 153 – 281 kHz
Usable sensitivity ..... 30 µV (30 dB) (S/N: 20 dB)
Selectivity ..... 50 dB (±9 kHz)

Note:

Specifications and the design are subject to possible modification without notice due to improvements.

2. CONNECTION

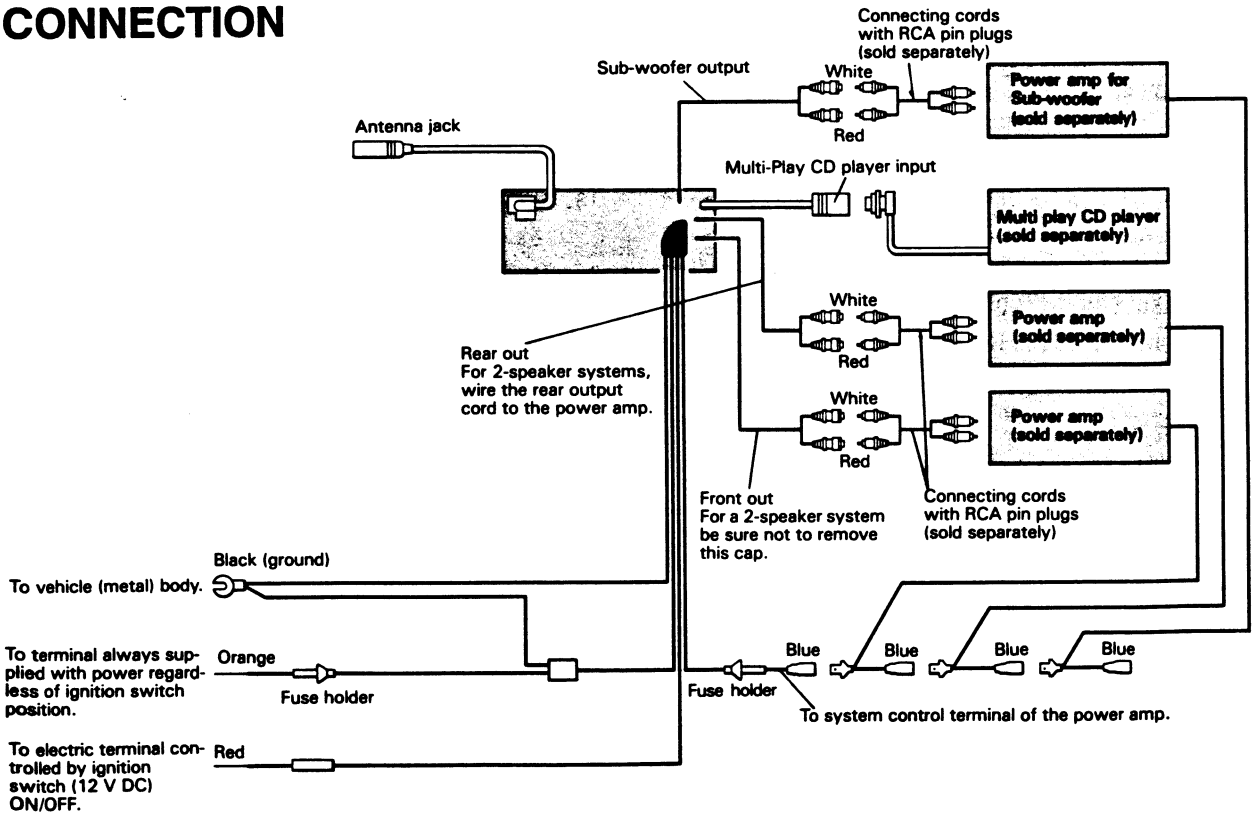

3. DISASSEMBLY

• Removing the Case

1. Insert and turn a flat screwdriver to remove the case.
2. Raise the case to remove.

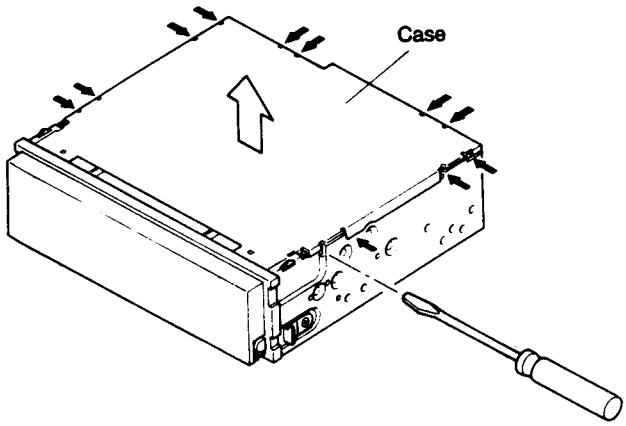

Fig. 1

• Removing the Grille Assy

1. Press the solenoid lever in the direction of the arrow to open the grille assy. (Fig. 3)

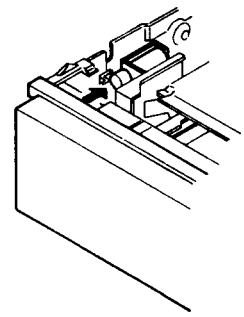

Fig. 3

• Removing the Cassette Mechanism Assy

1. Remove the four screws.
2. Disconnect the deck unit connector.
3. Remove the cassette mechanism assy.

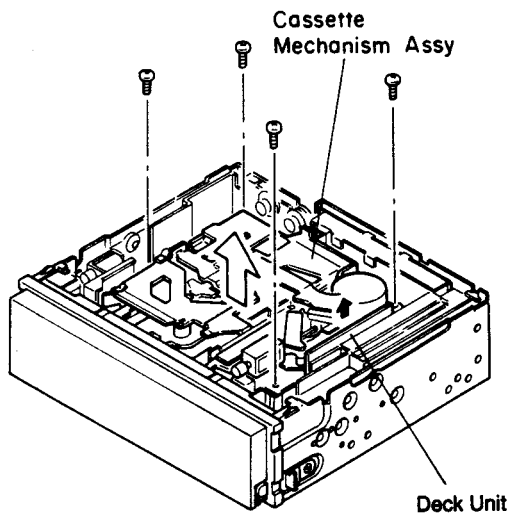

Fig. 2

2. While holding down the lock button, pull the grille assy toward you. (Fig. 4)

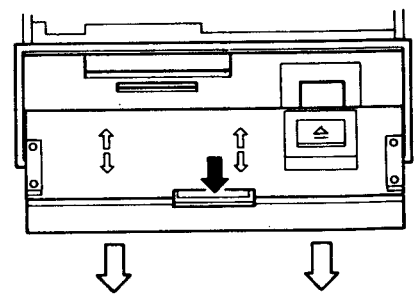

Fig. 4

• Removing the Grille Holder Assy

1. Remove the two screws.
2. Disconnect the three connectors.
3. Press the tabs at three locations indicated by arrows, and then pull out the grille holder Assy.

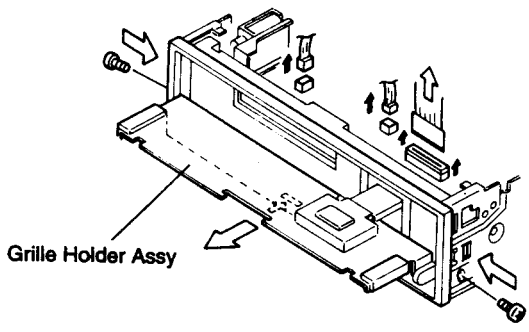

Fig. 5

• Removing the Audio Tuner Unit

1. Remove the screw C, and then remove the holder.
2. Remove the three screws D.
3. Unbend the tab indicated by arrow until straight.
4. Raise up on audio tuner unit to remove it from chassis unit.

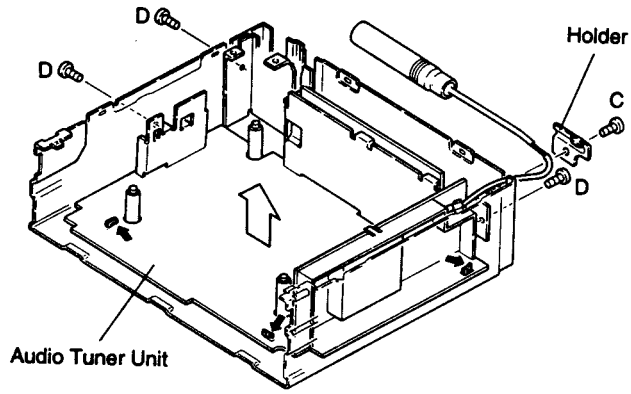

Fig. 7

• Removing the Display Unit

1. Remove the two screws A, and then remove the cover unit.
2. Press the tabs at three locations indicated by arrows, and then pull out the cover unit.
3. Remove the three screws B, and then remove the display unit.

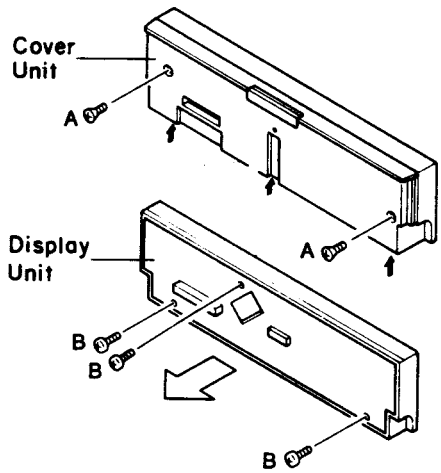

Fig. 6

4. USING THE REMOVABLE FRONT PANEL

The front panel of this unit can be removed to prevent theft.
Also, to prevent forgetting to remove the front panel, 5 seconds after the ignition is turned off, if the front panel is still attached, a buzzer will sound for a few seconds.
If you wish to cancel the sound of the buzzer, please do as follows. Keep the minus side (−) of button ② depressed and turn the vehicle's ignition key from OFF to ON. By repeating this procedure, the sound of the buzzer will be restored.

Detaching the Front Panel

1. Press button ① to open the front panel.

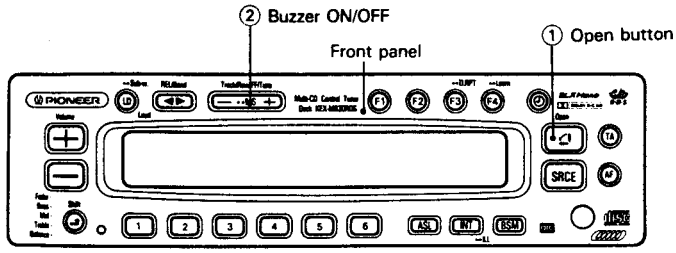

- The button ① may only be used when the ignition key is turned on, or within 30 seconds after turning the ignition off. If more than 30 seconds have passed since the ignition was turned off, button ① will not open the front panel.

2. While holding down the lock button, pull the front panel toward you.
- Take care not to put pressure on the display or drop the front panel.

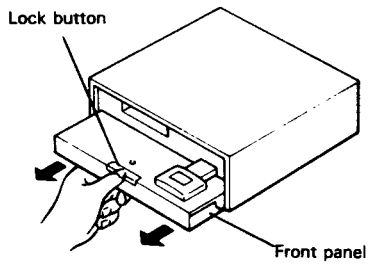

3. Close the inner lid.

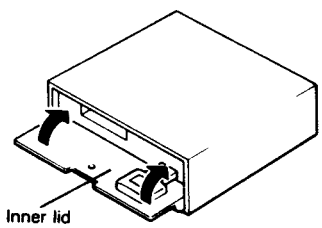

- Always keep the inner lid closed while the front panel is out, otherwise dirt or dust may get into from the cassette slot, causing malfunctions.

4. Enclose for safekeeping the front panel that is removed in the supplied protective case.

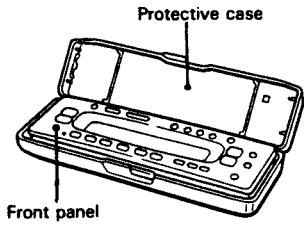

Replacing the Front Panel

1. Make sure the inner lid is closed.
2. Push the front panel into the main body.

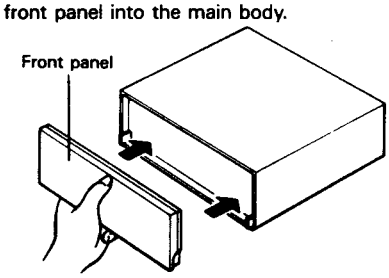

- When replacing the front panel, do not put pressure on the display or control buttons.
- If the front panel is not installed correctly, it may not be opened when the open button is pressed or no operation may occur when an operation button is pressed. In this case, push down the front panel slightly.

Precautions

- Do not force the front panel to remove it.

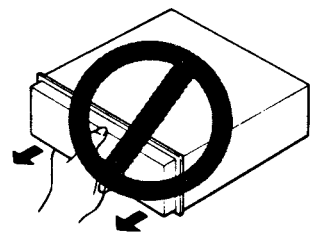

- Do not touch the contacts on the front panel or on the unit body, since this may result in poor electrical contact. If dirt or other foreign substances get on the contacts, wipe them with a clean, dry cloth.

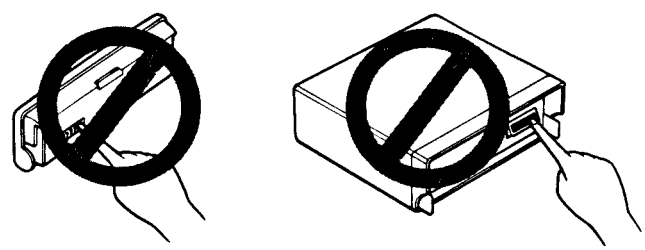

Precautions When Handling the Front Panel

- Do not leave the front panel in any area exposed to high temperatures or direct sunlight.
- Do not drop the front panel or otherwise subject it to strong impact.
- Do not allow such volatile agents as benzene, thinner, or insecticides to come into contact with the surface of the front panel.
- Never try to disassemble the front panel.

5. ADJUSTING VOLUME AND TONE

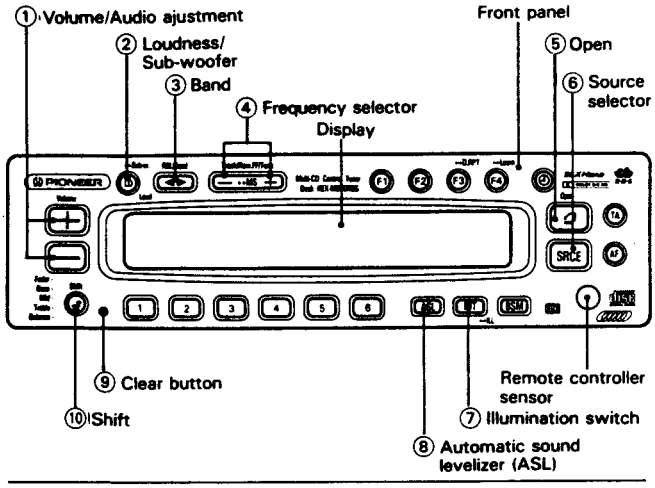

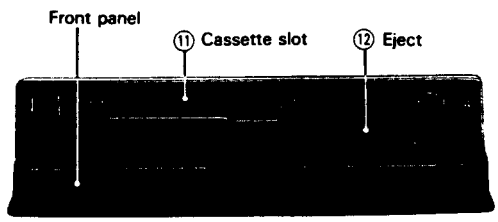

Using the Clear Button

Once all wiring is complete, press button ⑨ with a thin, pointed object. Though not a normal occurrence, the microprocessor which controls the operation of this unit can be affected by electrostatic noise. This generally is indicated by such symptoms as no power being supplied when you switch the unit on, failure of buttons and controls, or an abnormal display. Should this happen, press button ⑨ with a thin, pointed object to reset the microprocessor. Note that doing so also resets all audio controls, so you will have to make any desired settings again. This operation deletes all memory contents, such as frequencies stored in the preset memory, so you will have to make any desired settings again.

Switching Power On

Tuner

Press button ⑥ to switch the tuner power on. Press button ⑥ again to switch the power off.

Tape

Press button ⑤ to open the front panel, and load a cassette in through cassette slot ⑪. The cassette will play. To eject the cassette, press button ⑤ to open the front panel and press button ⑫.

Note:

- None of the operation buttons except button ⑫ work while the front panel is open. Use the control buttons after shutting the front panel.
- During operation, the power to this unit is turned off if the engine is started or if the ignition is turned off then to ACC or ON again while the front panel is open. In this case, close the front panel to resume operation.

Source Selector

When a cassette is loaded and button ⑥ is pressed, the source shifts in the order tape → tuner → power off. If this unit is combined with a multi-play CD player sold separately such as CDX-M50, the source shifts in the order multi-play CD player → tape → tuner → power off.

Adjusting Audio

Press button ① to adjust the volume. Each press of button ⑩ changes the display and the function of button ① as follows:
Volume → Fader → Bass → Middle → Treble → Balance

Adjusting Volume

Pressing the (+) side of button ① increases the volume, while the (−) side decreases it.

Adjusting the Fader

This function controls the balance between the front and rear speakers of a 4-speaker system. Pressing the (+) side of button ① shifts the balance to front speakers, while the (−) side shifts it to the rear speakers.
For 2-speaker systems, set FAD. 0.

Adjusting Bass
Pressing the (+) side of button ① increases bass, while the (−) side decreases bass.

Adjusting Middle
Pressing the (+) side of button ① increases middle, while the (−) side decreases middle.

Adjusting Treble
Pressing the (+) side of button ① increases treble, while the (−) side decreases treble.

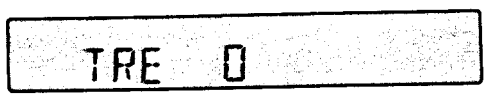

Adjusting Balance
Pressing (+) side of button ① shifts the balance to the left speaker, while the (−) side shifts it to the right speaker.

- When you're adjusting fader, bass, middle, treble, or balance settings, the indicator will stop at the center setting. About 5 seconds after adjustment has been made, the display returns to its previous state.

ASL (Automatic Sound Levelizer)
Press button ⑧ to operate ASL (Automatic sound levelizer). ASL monitors the noise inside the vehicle, which changes according to the driving speed and the road conditions, and automatically increases the volume when the noise increases. (ASL is shown on the display.)

- At high volume, ASL automatically reduces the selected intensity if it will make the volume too loud.
- If ASL operates and the volume becomes too high, the sound may be distorted. In this case, reduce the volume.

ASL Intensity Selection
ASL has three different intensity modes (increases in volume according to noise). The greatest increase is obtained with ASL H, followed by ASL M, then ASL L.

1. Hold down button ⑧ for at least 2 seconds. The current ASL mode will be shown on the display for about 5 seconds.

(Example ASL L)

2. While the display indicates an ASL mode, press either the (+) or (−) side of button ① to change the ASL mode.
- About 5 seconds after the ASL mode has been changed, the display returns to the previous indication.

Using Source Level Adjuster
You may wish to adjust volume when you have changed the source to radio, tape, or CD or when you have changed the radio band from FM to MW/LW. You can do so on the basis of the volume of FM as follows:

1. Use the button ⑥ to change the source. (In case of radio, change the band to MW/LW.)
2. Hold down the button ⑩ for about 2 seconds, and the display will show you the volume of the source.

3. To increase the volume, press the (+) side of the button ①, and to decrease press the (−) side. You can adjust the volume within a span of V−4 and V+4. The display automatically returns to the previous showing when five seconds have elapsed after the adjustment.
- No adjustment can be made when an FM station is tuned in.

Using the Sub-woofer
When the sub-woofer is connected to the sub-woofer output terminal on this equipment, it is possible to adjust the output level and frequency of the sub-woofer.
- The sub-woofer output becomes a monaural output. The sub-woofer output is not changed by adjusting the balance of this set.

Using the Sub-woofer Function
1. Press button ② for at least 2 seconds. The unit switches to the sub-woofer adjustment mode after about 5 seconds and there is the following display:

When the sub-woofer function is ON.

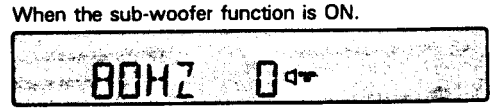

When the sub-woofer function is OFF.

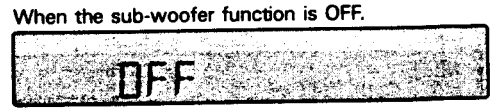

2. If button ③ is pressed while the unit is in the sub-woofer adjustment mode, it is possible to turn the sub-woofer function ON or OFF.

Adjusting Output level and Frequency

1. Press button ② for at least 2 seconds and the unit switches to the sub-woofer adjustment mode. The present frequency and output level is displayed for about 5 seconds.
- If the sub-woofer function is not ON, there will be no frequency or output level display. Follow the directions above to turn the sub-woofer function ON.

2. Adjustment of output level and frequency

Adjustment of Output level

While the display is displaying the sub-woofer adjustment mode, push button ① either to the (+) side or (−) side to adjust the output level. It is possible to adjust over a range of +6 to − −.

- When − − is displayed, the sub-woofer output is zero.

Adjustment of Frequency

While the display is displaying the sub-woofer adjustment mode, push button ④ either to the (+) side or (−) side to adjust the frequency. It is possible to adjust to three frequencies: 50 Hz, 80 Hz and 120 Hz.

Using the Loudness Function

Press button ② and the LOUD indicator will appear on the display. This "loudness" function enhances both the high and low ranges of sound to give even more power to output even at low volumes.

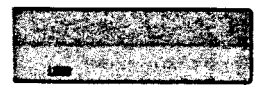

Switching Illumination Colour

Pressing button ⑦ for more than 2 seconds causes the illumination color to switch between green and amber. Pressing clear button ⑨ causes the illumination to be turned amber.

6. USING THE TUNER

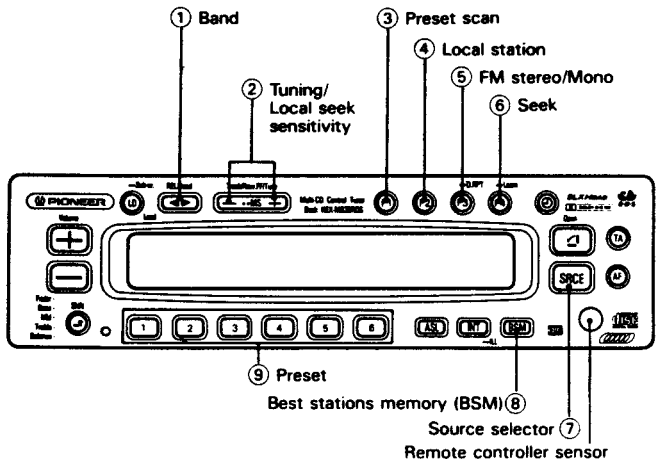

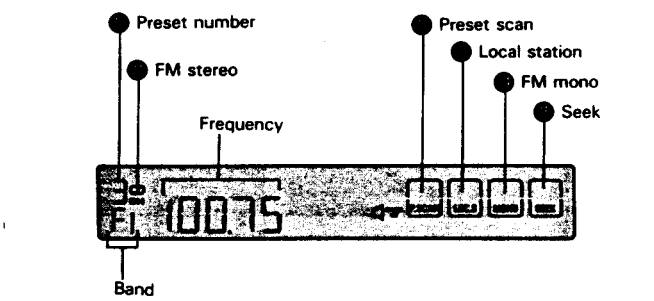

1 Turn on the tuner's power by pressing button ⑦. Each time the button is pushed the main unit switches between tuner and power off modes.

- Operation of this equipment differs if there is a cassette tape inserted in the unit or a separately sold multi-play CD player is connected to the unit. For details, see the section on "Source Selector" on page 6.

2 Press Button ① to select a band.

FI — FII — FIII — M/L
(FM1) (FM2) (FM3) (MW/LW)

Use button ② to switch between MW (531 − 1,602 kHz) and LW (153 − 281 kHz).

3 Use seek tuning to tune in a frequency.
Confirm that the seek frame ● on the display is illuminated. If it is not, press button ⑥ to light it. Press button ② to either the (+) or (−) sides. The tuner will automatically tune in the next higher frequency if the (+) side was pushed, or the next lower frequency if the (−) side was pushed.

4 Adjust volume and tone (see page 6.)

5 Assign the tuned frequency to one of the Buttons in Bank ⑨ (preset memory).
Press and hold down one of the buttons in Bank ⑨ for at least two seconds. The frequency is assigned to the selected button when the preset number ● stops flashing on the display. Up to 18 FM stations (6 each for FM1, FM2 and FM3), and six MW/LW stations can be assigned to the preset memory buttons in Bank ⑨.

6 Once a frequency is assigned to a Button in Bank ⑨, you just need to press that Button to tune it in.
This also causes the number of the button pressed to appear at Position ● on the display.

BSM (Best Stations Memory)

This function automatically locates stronger stations and automatically assigns their frequencies to the buttons in Bank ⑨, from strongest to weakest. It comes in handy when trying to find local stations while driving.

1. Press button ① and select a band.
2. Hold down button ⑧. After about two seconds, a "beep" will sound to signal that the BSM search has started. At this time, "BSM" will flash on the display.

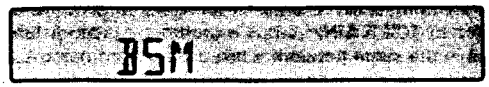

3. The frequency display will return once BSM search is complete, and frequencies are assigned to buttons 1 through 6 in Bank ⑨.

- At the end of the BSM search, the displayed frequency is that assigned to button [1] of Bank ⑨.
- If there are fewer than six strong stations in the area, some of the buttons in Bank ⑨ will not be assigned frequencies, so they will retain any frequencies, assigned to them previously.
- BSM search may take as long as 30 seconds in areas where there are few strong stations.
- You can cancel BSM search by pressing button ⑧ again.

Preset Scan Tuning

This function lets you automatically monitor the stations assigned to the preset buttons.

1. Pressing button ③ turns on the frame of preset scan ● and flashes preset number ●.
   Each station assigned to the buttons in Bank ⑨ will be automatically tuned in for about eight seconds.
2. When you hear a station that you like, press button ③ again to cancel preset scan tuning and remain at that station.

Manual Tuning

Use manual tuning when stations are too weak to be picked up by seek tuning.

1. Clear the SEEK fram ● illumination by pressing button ⑥.
2. Each press of the (+) side of button ② increases the frequency in 50 kHz steps in the FM band, 9 kHz in the MW band and 1 kHz in the LW band. Pressing the (−) side of button ② decreases the frequency. Holding down either side of button ② changes the frequency at high speed.

Switching between FM Stereo and Mono

Generally, it is best to allow the ARC (Automatic Reception Control) function to automatically set the optimum listening conditions. ⓞ ● turns on during stereo broadcast is in reception. When there is a large amount of noise, you can press button ⑤ for clearer mono reception (The frame of FM mono ● turns on).

Adjusting Seek Sensitivity

The seek tuning function of this tuner lets you select between a local setting for reception of strong stations only, and a DX (distant) setting for reception of weaker stations. The local setting also has four seek tuning sensitivity levels for FM and two levels for MW/LW to match local conditions.

Changing the Local Seek Sensitivity

1. Use button ① to select a band.
2. Hold down the button ④ for more than two seconds, and the display will show you the current local seek sensitivity for about five seconds.

(Example: LOC-2)

3. While the local seek sensitivity remains on the display, press the (+) side of button ② to increase the sensitivity level, and the (−) side to decrease the level as shown below.
   FM : LOC-1 ⇄ LOC-2 ⇄ LOC-3 ⇄ LOC-4
   MW/LW: LOC-1 ⇄ LOC-2
   The LOC-4 setting allows reception of only the strongest stations, while lower settings let you receive progressively weaker stations.

- The display of local seek sensitivity returns to the frequency when about five seconds have elapsed after the change of sensitivity.

Switching between Local and DX

Press button ④ to switch between Local and DX (distant) seek tuning. When the frame of local seek ● is lit, seek tuning is performed with the local seek sensitivity. Otherwise, seek tuning is performed with the DX seek sensitivity.

7. USING THE RDS FUNCTION

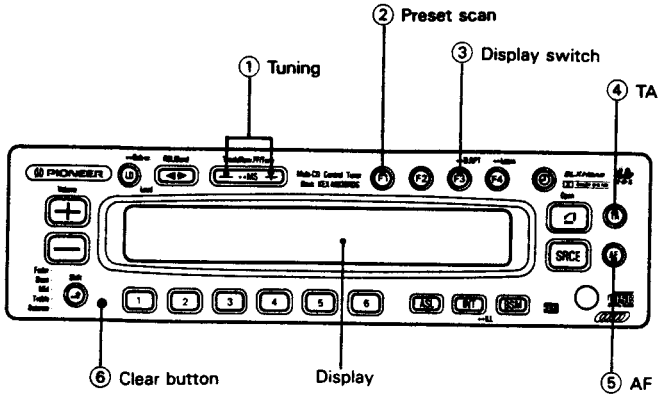

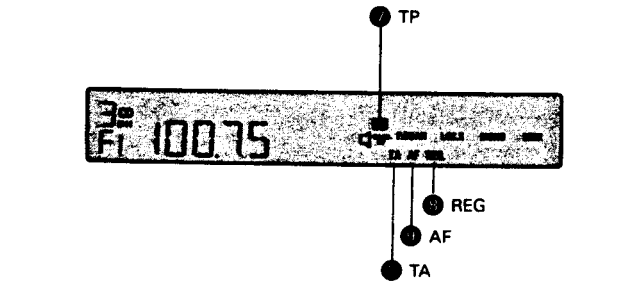

What is RDS?

The RDS (Radio Data system) is a digital information system developed by the EBU (European Broadcasting Union). Piggy-backed on normal FM broadcasts, RDS offers a variety of information services and automatic retuning functions for RDS-compatible car stereos.

RDS digital data includes various data, such as PI, PS, AF, TP, and TA.

PI ..... **Program Identification**
PS ..... **Program Service Name**
AF ..... **List of Alternative Frequencies**
TP ..... **Traffic Program**
TA ..... **Traffic Announcement**

RDS Function of This Unit

This unit has the following functions for making use of RDS data.

- Station name display using PS.
- AF (Alternative Frequency) reception, which automatically tunes into the stronger station in the network being listened to using PI and AF.
- Automatic reception of traffic information broadcasts using TP/TA.

Network/Station Name Display

Switch the tuner on and choose one of the three FM bands.
When you tune into an RDS station with manual or seek tuning, the frequency display changes to the network/station name display after a few seconds by means of the PS code.

- The RDS functions of this unit use RDS codes transmitted along with FM broadcasts. RDS doesn't work on the MW or LW bands.
- The RDS functions may not work properly in areas where the RDS transmissions are at an experimental stage or where there are flaws in the broadcasting system.
- To display the frequency, press button ③ for about 2 seconds. The frequency is displayed for about 5 seconds.

AF (Alternative Frequency) Reception

This unit returnes to the stronger alternative transmitter in the list of alternative frequencies (AF). Thus a motorist can keep listening to the programs in the same network.

Example:
If there are following network broadcasting stations, the reception frequency automatically changes from 98.5 MHz to 107.5 MHz to 96.0 MHz to 102.5 MHz, but a motorist can keep listening to the programs in the same network while driving from point A to point B.

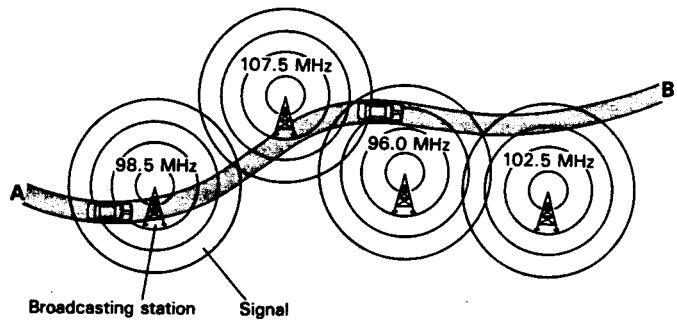

Alternative Frequency Reception

To select Alternative Frequency reception, press the button ⑤ (AF ● will appear on the display). Once tuned to an RDS network station, as long as you drive within the area or nation served by the network, the unit will automatically retune to the strongest transmitter serving the network, using the PI and AF codes, when the tuned station gets weaker.

- **If the tuned RDS station doesn't have AF (List of Alternative Frequencies) data or the unit cannot receive the AF data for some reason, the AF function will not work when the tuned RDS station's signal falls below a certain level. When this happens, AF ● flashes on the display, indicating that it isn't working.**
- When the button ⑤ is on, only RDS stations can be tuned in with seek or preset scan tuning.
- If BSM is activated while the AF button ⑤ is on, only RDS stations will be preset.
- Non-RDS stations such as those using the Swedish MBS system may be tuned in as RDS stations, but this is due to both systems sharing the same 57-kHz subcarrier frequency and is not a malfunction of the unit.
- If the signal from the tuned RDS station falls below a certain level and AF works, it may be that the other transmitters on the same network are found to be even weaker.
  If this is the case, AF ● flashes on the display, indicating that it isn't working.
- If a station frequency is held in a preset memory for FM band, the AF function will also be available to the preset station (Network memory).
- If the button ⑤ is pressed before selecting a preset station, the alternative frequency reception functions when the preset station is being recalled. Because of this, there may be a pause before the station comes on, but this is not a malfunction.
- During the day, some radio stations broadcast regional programmes which are different from those broadcasted by other stations within the same network. If the radio has pitched up a regional programme and you wish to continue listening to it, hold the button ⑤ down for more than two seconds to select the regional function. (REG ● will appear on the display.)
  Using the AF regional function, the radio will tune automatically to those stations broadcasting the same regional programme. However, some stations do not contain the required AF data for this function to work.

(This is not a malfunction of the unit.) Hold down the button ⑤ again for more than two seconds to cancel the regional function. (REG ● will go off.)

- If the radio band is set to FM beforehand, and the main unit's cassette tape or the multi play CD player is being listened to, pressing the button ⑤ will power on the radio and enter AF reception.
  However, listening to the radio is not possible.

Traffic Information Reception

When a station is selected such that TP ● in the display lights, traffic reports station will be received. When either TP or SK stations are tuned in, and the button ④ is pushed, traffic report waiting status will be entered, even if the cassette or the multi play CD player is on. When a traffic report begins, the unit will switch from the cassette or the CD sound to the traffic report. The traffic report volume is preset, so even if the attenuator is on, the traffic report will be heard at the same volume.

- It is possible to adjust the volume of the traffic report reception. If the volume is adjusted during the reception of a traffic report, the next time a report is received, the volume will be at the previous setting. However, if the preset volume of the traffic reception is below the normal tuning volume, the volume of the traffic reception will not decrease. And the volume at this period will be memorized as the new traffic reception volume.
- If the radio band is already set to the FM band, even when listening to the cassette or the multi play CD player, when the button ④ is pushed, the radio will be powered on, and traffic report waiting will begin. When a traffic report begins, the system will switch the sound source from the cassette or the CD to the traffic report.
- While the button ④ is on and you are listening to a cassette or CD (TA ● is shown on the display), the radio starts BSA (Best TP or SK Station Auto search) 10 seconds after TP ● disappears from the display, tune in the strongest TP or SK station, and stands by for a traffic bulletin. BSA doesn't work when AF is on, so turn the button ⑤ off when you want to use BSA.
- If button ④ is turned on (TA ● on the display is lit) while you are listening to the cassette or the CD, the radio will be displayed for several seconds. If button ② is pressed while the radio is displayed, the radio will begin the TIPS sequence (automatic monitoring of several TP or SK stations) and all TP or SK stations that have been preset to memory on the band that is being received will await traffic reports.
- During TIPS operation, if the signal from the TP or SK station in preset memory becomes weak and difficult to receive for 3 minutes, then BSA reception will begin automatically.
- Don't press the button ④ in an area or a country where the traffic information service is not available, as seek tuning and preset scan will not pick up any stations. An alarm sounds 30 seconds after the button ④ has been pressed, warning the driver to switch it off.
- Thirty seconds after TP ● disappears from the display, which occurs if the signal from the TP or SK station becomes weak, an alarm sounds for ten seconds to tell you to tune to another TP or SK station.
- If seek or preset tuning is used when the button ④ is on, only the TP or SK stations will be selected.
- If BSM is used when the button ④ is on, only TP or SK stations will be preset.

Tuning Steps

The tuning step is normally 50 kHz during seek tuning on an FM band. This tuning step changes to 100 kHz during AF reception or traffic report reception. If desired, you may set a tuning step of 50 kHz for AF reception or traffic report reception by holding down the (+) side of the button ① while turning the ignition key from OFF to ON.

- During manual tuning, the step does not change; it remains fixed at 50 kHz.
- When the batteries are changed, or when button ⑥ is pressed, the tuning step will change back to 100 kHz.
- When the AF reception function is on, only those stations being broadcast at 100 kHz steps are subject to AF reception (CENELEC STANDARD).

8. USING THE TAPE DECK

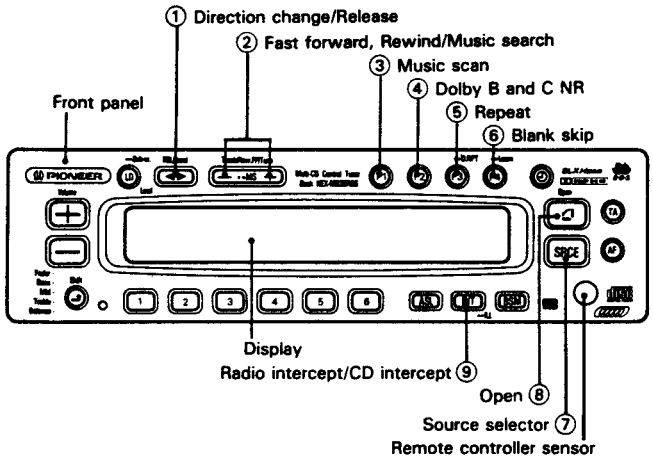

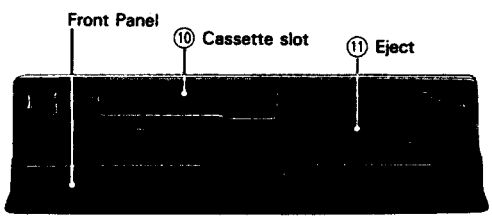

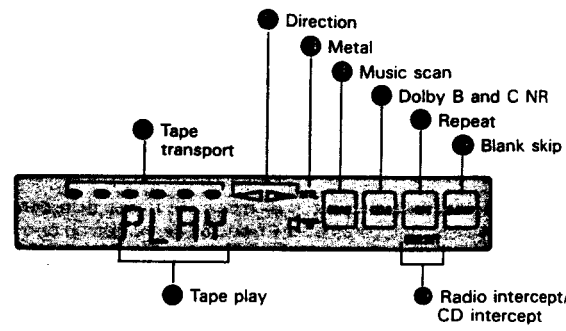

1 Press button ⑧ to open the front panel.

2 Load a cassette in through the cassette slot ⑩. The cassette will play.
Tape play ●, tape transport ●, and direction ● appear.

3 Close the front panel and adjust volume and tone (see page 6).

4 To stop play halfway, press button ⑦ to switch the function off. To restart play, press button ⑦ some times until PLAY ● appears on the display. The tape begins playing at the position where it stopped.

5 To eject the cassette, press button ⑧ to open the front panel and press button ⑪.

Note:

- The power is not switched on even if a cassette is loaded in through cassette slot ⑩, if the engine is started or if the ignition is turned off then to ACC or ON again while the front panel is open. In this case, close the front panel to switch the power on and start play.

- Power is automatically turned off when the cassette tape has not been set within a few seconds. When this happens, remove the tape by pressing the button ⑪ because of a possible trouble with the tape.
- A loose or warped label on a cassette tape may interfere with the eject mechanism of the unit or cause the cassette to become jammed in the unit. Avoid using such tapes or remove such labels from the cassette before attempting use.

Changing Program

Press the button ① to change the side of tape from A to B or vice versa.

Using Fast Forward and Rewind

1. To fast-forward tape, press the (+) side of the button ②.

To rewind tape, press the (−) side.

2. To release the fast forward or rewind function, press the button ①.

Using Music Search

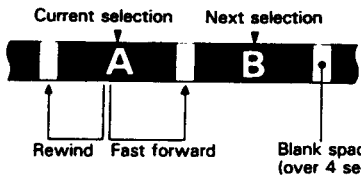

1. To repeat the current selection (A), press the (−) side of the button ② two consecutive times.

To hear the following piece of music (B) rather than continue the current selection, press the (+) side of the button ② two consecutive times. Pressing the button ② three consecutive times makes the normal sequence of playing resume.

2. To release the music search function, press the button ①.

The following errors will cause the music search function to operate improperly, even though the unit is not malfunctioning.

- Unrecorded blank portion between selection is less than 4 seconds → the blank portion cannot be detected by the unit.
- Pauses in recorded conversations are longer than 4 seconds → the unit reads these as blanks between selections.
- Portions are recorded at very low volume for more than 4 seconds → the unit reads these as blanks between selections.

Using Radio Intercept and CD Intercept

CD intercept function activates only when connected with a separately sold multiplay CD player. (CDX-M50 etc.) The mode does not change to CD intercept mode (CD.INT ● appears) if the multiplay CD player is not connected.

The mode changes as follows each time button ⑨ is pressed:
Radio intercept (R. INT ● appears) → CD intercept (CD. INT ● appears) → Release (● disappears)

Radio intercept

Lets you listen to the radio during fast forward or rewind.

1. Press button ⑨ to go to the radio intercept mode (R. INT ● appears). The unit switches to the radio during fast forward or rewind.
2. To release radio intercept, press button ⑨ to erase the ● display.

CD intercept

Lets you listen to the CD during fast forward or rewind.

1. Press button ⑨ to go to the CD intercept mode (CD. INT ● appears). The unit switches to the CD during fast forward or rewind.
2. To release CD intercept, press button ⑨ to erase the ● display.

Using the Music Scan Function

Plays approximately the first ten seconds of each selection to help you search for the desired selection.

1. Press button ③ and frame ● will light. The unit will play approximately the first ten seconds of each selection in succession.
2. To release the music scan function, press button ③ again or press button ①.

Using the Music Repeat Function

Lets you listen to the same selection repeatedly.

1. When you want to listen to the same selection repeatedly, press button ⑤ and frame ● will light.
2. To release the music repeat function, press button ⑤ again or press button ①.

Using the blank skip function

Automatically carriers out fast forward to the start of the next selection when there is a blank area of 10 seconds or more between selections.

1. Press button ⑥ and frame ● will light. The unit will now carry out fast forward to the start of the next selection when there is a blank area of 10 seconds or more between selections.
2. To release the blank skip function, press button ⑥ again.

Dolby B and C NR

Press button ④ to listen to a cassette recorded using the Dolby NR system. Each press of button ④ shifts the Dolby NR mode as follows:
Dolby B NR (DOLBY ● appears) → Dolby C NR (DOLBY C ● appears) → Dolby NR off.

Auto Tape Selector

When a cassette tape is inserted, the automatic tape selector determines the tape type, and switches between 70 μs and 120 μs equalization. When it is a metal or chrome tape, MTL ● comes on. When it is a normal tape, nothing comes on.

9. USING THE REMOTE CONTROL

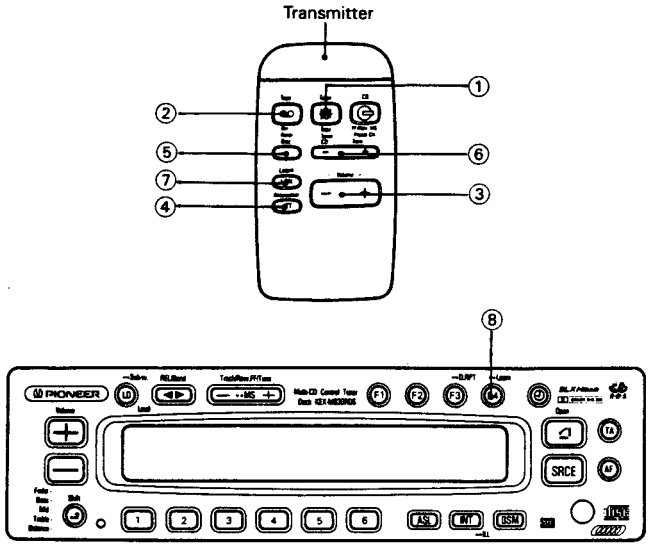

① Tuner
The tuner is selected. Pressing again turns off the power.

② Tape
If this button is pressed while there is a cassette tape inserted in the equipment, the unit will switch to tape-playing. Press it again to turn the unit OFF.

③ Volume
Press the (+) side to increase volume and the (−) side to decrease volume.

④ Attenuator
Press to reduce the volume to 1/10 of its current setting.
Pressing again returns the volume to its original level.
- This function is available using the remote controller unit only.

Operating Radio

⑤ Band
Band changes.

F1 — F2 — F3 — M/L
(FM1) (FM2) (FM3) (MW/LW)

⑥ Preset Channel
Press to tune the frequencies assigned to the preset button memory. Pressing the (+) side tunes in the next high preset button number, while (−) tunes in the next lower preset button number. The preset number changes at high speed when you hold either side of this button down.

Operating Tape

⑤ Program
Press this button to change the side of tape from A to B or vice versa.

⑥ Fast Forward/Rewind
Press the (+) side for fast forward and the (−) to rewind the tape. Press this button twice to perform the music search operation, and a third time to return to normal playback.

⑦ Learn Button
Takes on the function of the button operation recorded with the learning funtion. Refer to the "Learning Function" section for details.

Learning Function

Records one button from the main unit on the remote control's learn button. This can be convenient when a button which is used often is recorded.

1. Press button ⑧ on the main unit for about 2 seconds, until a beep is emitted. "LEARN" will flash on the display.

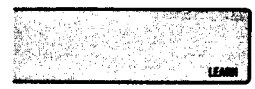

2. Press the button on the main unit that you want to use on the remote control.
3. Press the learn button ⑦ on the remote controller unit. The main unit button recorded can now be used from the remote control.

- Perform button recording while "LEARN" is flashing. If about 5 seconds pass without a button being recorded, the "LEARN" stops to flash, and the previously recorded button will remain in memory.

Preparing to Use the Remote Controller Unit

Loading Batteries

1. Remove the battery compartment cover from the remote controller unit.
2. Load two batteries, whose type is UM-4, AAA, or R03, as applicable, that come with the unit into the remote controller unit, ensuring that their polarity (+/−) is correct.
3. Replace the battery compartment cover.

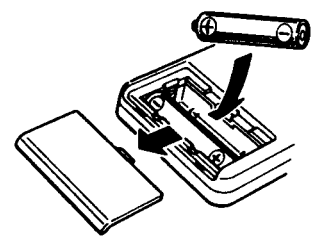

Precautions When Loading Batteries

Note the following precautions when loading batteries into the remote controller unit to avoid damage due to battery fluid leakage.

- Always check carefully that you are loading batteries with their ⊕ and ⊖ poles facing in the proper directions.
- Never mix old and new batteries. Always replace batteries with two new ones.
- Some batteries may appear to be identical but have different voltage ratings. Never mix battery types.
- Some batteries can be recharged and some cannot. Be sure to carefully read the label for the batteries you use.
- To avoid damage to the remote controller caused by battery leakage, remove the batteries from the remote controller if you do not plan to use it for more than one month. If you find that fluid has leaked, thoroughly wipe out the battery compartment and load a set of new batteries.

10. USING THE CLOCK DISPLAY

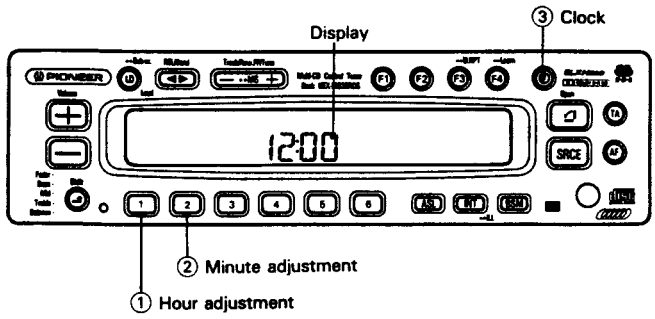

Displaying the Time

The clock is displayed while button ③ is depressed.
Press button ③ again to turn off the clock display.
The clock display cannot be used if the power for the cassette tape and radio is not ON.

Adjusting the Time

Adjusting the Hours

While holding down button ③, press button ① to adjust the hour setting of the clock. Each press of button ① advances the hour setting by one hour, and holding it down advances the setting at high speed.

Adjusting the Minutes

While holding down button ③, press button ② to adjust the minute setting of the clock. Each press of button ② advances the minute setting by one minute, and holding it down advances the setting at high speed.

- When the clock display is ON, pressing other buttons will release the clock display. The display will be restored approximately 25 seconds after the button operation has been completed.

11. PLAYING COMPACT DISCS

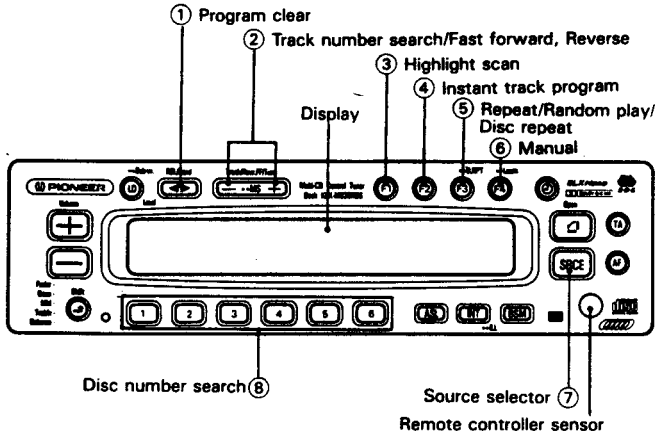

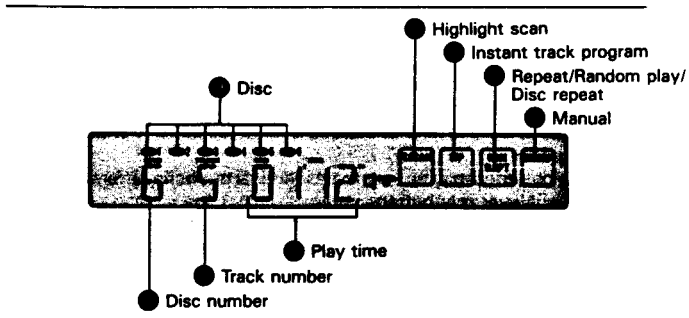

1 Press button ⑦ repeatedly until the unit goes to the multi-play CD mode. Disc number ●, track number ● and play time ● will light. For details, see the section on Source Selector on page 6.

2 Select a disc using disc number search.
Use the buttons ⑧ to select the desired disc. The number of the selected disc will be displayed in the display ●.

- Display ● indicates whether the magazine is loaded or empty.
- If there is a tray without a disc in the magazine, that tray number will not be selected even if its button is pushed.

3 Adjust the volume and tone. (Refer to page 6.)

4 To conclude play, press button ⑦ repeatedly until the power goes OFF.
To resume play, press button ⑦ again. For details, see the section on Source Selector on page 6.

- When the multi play CD player (CDX-M100) is installed, if playback is stopped and then restarted, it will resume play at the beginning of the track that was stopped.

Note:

- After you press a Button in Bank ⑧, it may take some time before play begins due to the time necessary to load and set the disc in the mechanism.
- When a disc in which there are several seconds between tracks is ued, the amount of elapsed disc-play time is shown, for example, as −01 and −00.

Track Number Search

The desired track on the disc currently being played can be selected by track (or song) number.

1. Make sure that the frame of the manual indicator ⑬ is not illuminated. If it is illuminated press button ⑥ to turn it off.
2. Use the button ② to select a track. Pressing the (+) side increases the track number ⑱, and pressing the (−) side decreases it. Holding the button down continuously increases or decreases the track number.

Using Highlight Scan

Highlight Scan is designed to enable you to conveniently scan all pieces of music contained in the disc by playing 10 seconds each at your designated point of time after the start of the music. The starting time of play is set at one minute in factory. Therefore, the highlight Scan begins one minute after the start unless you designate it otherwise.
When you do not want to change the factory-set time:

- When used in conjunction with the old type multi play CD players [CDX-M70] or [CDX-M100], the place where playback starts in highlight scan is fixed as the start of each track. Also, it is not possible to adjust this time setting.

1. Pressing Button ③ turns on the frame of Highlight Scan ⑩.
2. The contained pieces of music will be played in sequence for 10 seconds each one minute after the beginning.
3. Press Button ③ again when your selected piece comes, and it will continue to play. At this point, the Highlight Scan discontinues to operate.

- The previous function automatically resumes when a piece of music with which Highlight Scan began returns.

Changing the Starting Time of Highlight Scan

When you want to set the starting time of the Highlight Scan to 30 seconds:

1. Turn of frame illumination on the manual indicator ⑬ by pressing the button ⑥.
2. Keep pressing either (+) or (−) side of Button ② until the numerals reaches 30.
3. Pressing Button ③ for two or more seconds, turns on the frame of Highlight Scan ⑩.
   Highlight Scan will begin 30 seconds after the start of the next piece of music.

- The starting time of Highlight Scan can be designated at ten or tens of seconds only. A tenth or tenths of seconds can be disregarded.
- If a piece of music ends before your designated point of time at which Highlight Scan starts, the scanning is performed for its beginning 10 seconds.
- If a piece of music lasts less than 10 seconds, so does the Highlight Scan.
- You may wish to change the starting time longer without suspending the function. You may do so, however, only to a relatively long-playing piece of music because, as a matter of cource, the time cannot be set so as to come after the end of the music.

Using the Music Repeat and Random Play Modes

Press button ⑤ to switch to Music Repeat and Random Play. Display ⑫ will change as follows each time the button is pressed:
Music Repeat → Random Play → Release

Using Music Repeat

This function lets you listen to a track as many times as you wish.

1. During playback of a favorite track, pressing button ⑤ selects music repeat mode and repeats the track indefinitely.
2. To clear the music repeat state, press the button ⑤ (The frame illumination ⑫ will go out).

- When Music Repeat is not operational, the compact discs contained in the magazine will play sequentially from beginning to end, and then start from disc 1 again.

Random Play

This is a playback mode in which the built-in microcomputer selects the track number in random order, and it allows music to be enjoyed with a new sensation.

1. Press button ⑤ and select random play mode. When the current track is over, future tracks will be selected randomly.
2. To clear random play, press button ⑤. (The frame illumination ⑫ will go out.)

- Since selections are played in random order, the same selection may be played twice in succession.
- With the multi play CD player, any track from any discs in the magazine may be selected. However, if and old type multi play CD player is used (CDX-M100), random play will only select tracks from a single disc.

Using the Disc Repeat Function

When you wish to listen repeatedly to the same single disc in the magazine.

1. Press button ⑤ for at least 2 seconds. The ⑫ display will appear as follows:

2. To release the disc repeat function, press button ⑤ again for at least 2 seconds.

Using Fast Forward and Reverse

1. Turn on manual frame ⑬ illumination by pressing button number ⑥.
2. Press the (+) side of button ② for fast forward, and the (−) side for reverse.

- Sound is output during fast forward and reverse operations.

• Using the Program Play

This function lets you program the play sequence of all of the tracks contained on the compact discs loaded in the magazine.

- The ITP function will not operate when connected to either the CDX-M70 or CDX-M100.
- Up to 32 selections can be programmed for a single magazine.
- Up to 16 different magazines (max. 32 selections per magazine) can be programmed individually. If you program more than 16 magazines, old programs are automatically replaced by new ones.
- Automatic Magazine Program Selection (AMPS) retrieves the right program from the memory automatically, as soon as a preprogrammed magazine is loaded. Preprogrammed magazines are identified using the CD in the tray 1 of the magazine. Therefore be sure that tray 1 contains a disc.

Programming

1. While a disc is playing, select the desired disc and track you want to program.
2. Press the ITP button ④ memorize the track being played.

Displays the number of the step being added to the memory

3. Procedures 1 and 2 above can be repeated until a maximum of 32 steps are programmed.

- If the 33rd step is selected, the "**FULL**" display will appear, indicating that no more selections can be programmed.

- ITP memory is not possible during music repeat or random play.
- When there are already a number of selections in the memory, the new selection will be added to the last step.

• Playing Disc by Remote Control

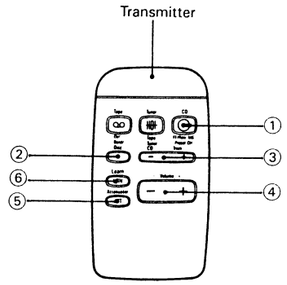

Playing back the program

1. If the ITP button ④ is pressed for about 2 seconds during normal playback, then program playback will start. (The ITP frame ⑫ will light.)

Displays the step number being played.

2. Press the ITP button ④ again to cancel program play.

- Pressing button ② during programmed play makes it possible to search for a specific step number from among the programmed selections.
- Program play returns to the first step in the programmed sequence when it reaches the end of the program.
- When playing a magazine that has no program recorded, "**EMPTY**" will be displayed for approximately 3 seconds.

Erasing the program

It is possible to erase one or all selections of magazine being played.

To erase a single selection:

1. Press button ② during programmed play, and search for the specific step you wish to erase.
2. Press the Program Clear button ① for at least 2 seconds and the selection being played will be erased.

- After the particular track has been erased, the tracks in the next position move from down up one notch in the order from the previous position.

To erase the entire program:

While a disc is playing, hold down button ① for at least 2 seconds. All the programs in the magazine being played will be erased.

① CD
Unit goes to CD play. Press again to turn OFF.

② Disc Number Search
Used to specify the number a disc loaded in the magazine. Each press of this button sequentially advances the number.

③ Track Number Search
Press to search for a selection (track number) on the current disc. Press the (+) side to increase the track number on the display, and the (−) side to reduce the track number. Holding down either side of this button changes the track number at high speed.

④ Volume
Press the (+) side to increase volume and the (−) side to decrease volume.

⑤ Attenuator
Press to reduce the volume to 1/10 of its current setting. Pressing again returns the volume to its original level.

- This function is available using the remote controller unit only.

⑥ Learn Button
Takes on the same function as the button recorded with the learn function. Refer to the section "Learning Function" on page 13 for details.

12. CIRCUIT DESCRIPTION

12.1 BLOCK DIAGRAM

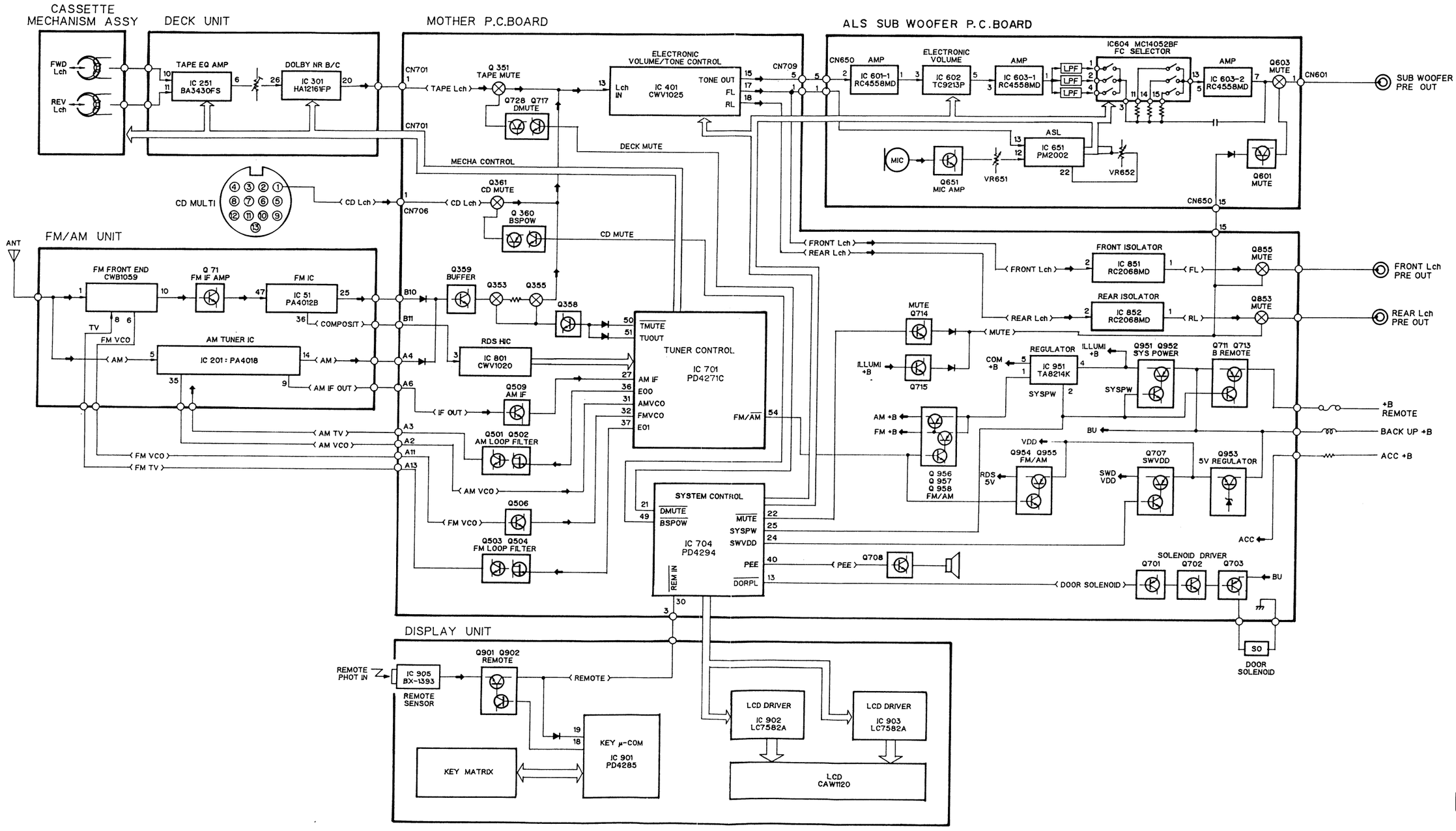

Fig. 8

12.2 SUB WOOFER CIRCUIT

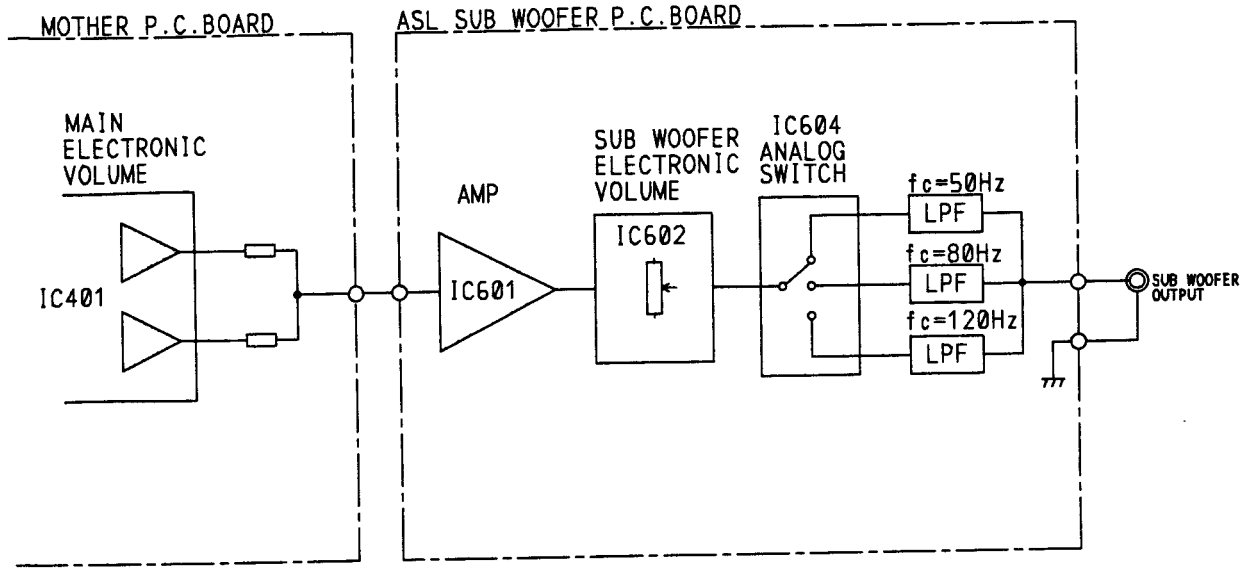

Fig. 9

1. Mixes the Lch and Rch outputs of electronic volume IC401 on the mother P. C. board and outputs it to the MONO.

2. Amplifies it by operational amplifier IC601 on the ASL sub woofer P. C. board so as to obtain a level above the normal output.

3. Adjusts the sub woofer output level by electronic volume IC602.

Attenuation of electronic	Sub woofer output level
0 dB	+12 dB
–12 dB	0 dB
–24 dB	–12 dB

4. Cuts the frequency components above the cutoff frequency at a curve of 18 dB/cct using the low pass filter.

5. Switching of the cutoff frequency is effected by switching the resistance to determine the time constant of the low pass filter by analog switch IC604.

LOW PASS FILTER (ACTIVE FILTER)

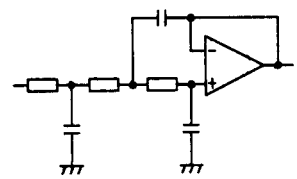

Fig. 10

13. ADJUSTMENT

13.1 TEST MODE

Test mode is mainly used in adjustment of CD multi-players (such as CDX-M40).

- Switching to test mode

  While pressing the AF, 6 keys together, switch the back-up ON or release the clear button.

- Canceling test mode

  Press the CD multi-player clear button, and then the KEX-M830RDS clear button. Or, switch the CD multi-player and KEX-M830RDS back-up OFF.

- Key functions during test mode

  The CD multi-player, deck and tuner are selected by the [SRCE] key.

a)CD multi-player

Key	Function
BAND/REL	Regulator ON/OFF
FWD	FWD kick
REV	REV kick
F1	Tracking close
F2	Tracking open
F3	Focus close
F4	Carriage/tracking switching

b)DECK, TUNER

No corresponding function, Normal operation executed.

•Flow Chart

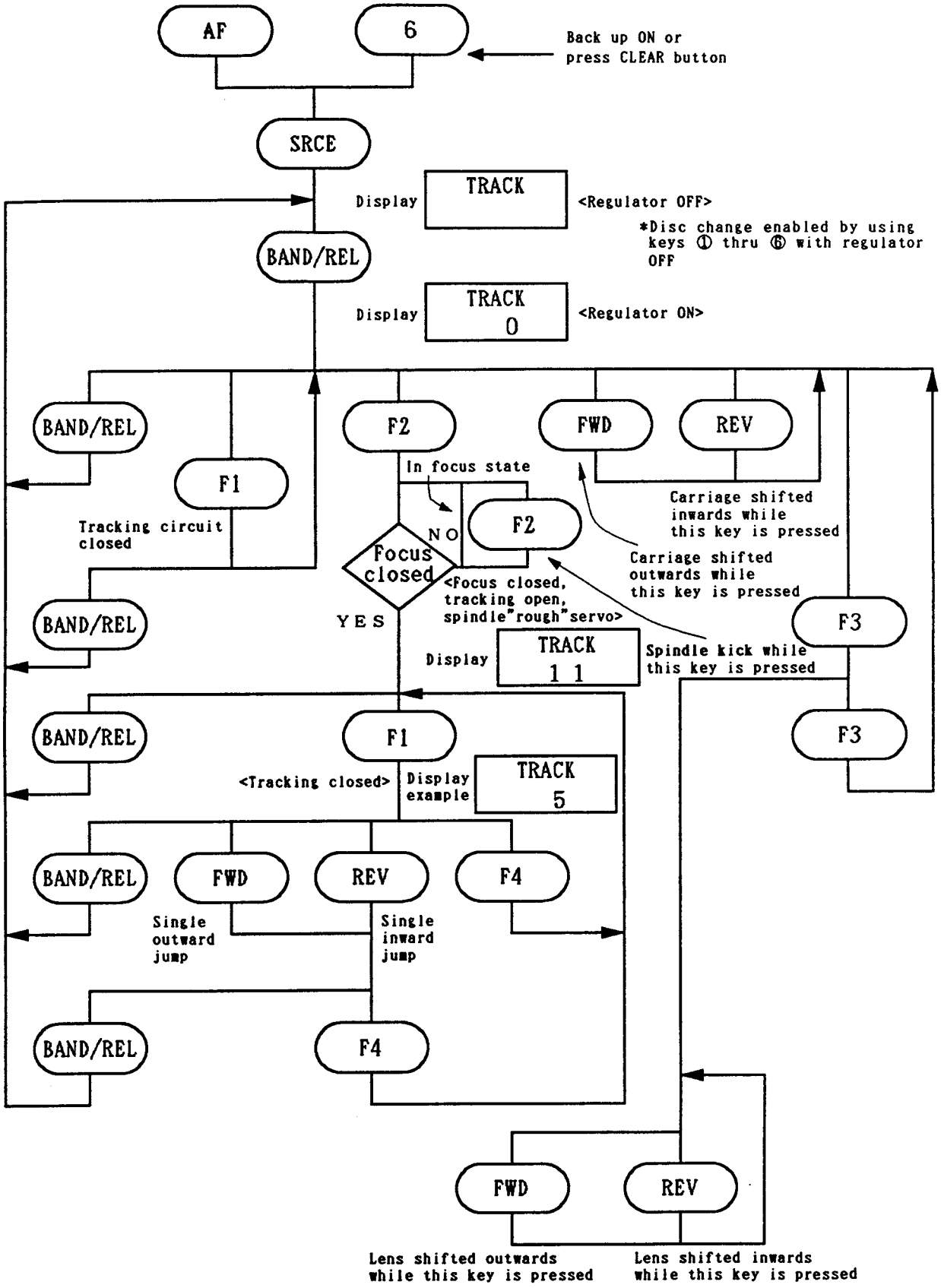
AF
6
Back up ON or
press CLEAR button
SRCE
Display
TRACK
<Regulator OFF>
*Disc change enabled by using keys ① thru ⑥ with regulator OFF
BAND/REL
Display
TRACK
0
<Regulator ON>
BAND/REL
F1
Tracking circuit closed
F2
In focus state
NO
Focus closed
YES
<Focus closed, tracking open, spindle"rough"servo>
FWD
REV
Carriage shifted inwards while this key is pressed
F2
Carriage shifted outwards while this key is pressed
F3
Display
TRACK
1 1
Spindle kick while this key is pressed
BAND/REL
F1
<Tracking closed>
Display example
TRACK
5
F3
BAND/REL
FWD
REV
F4
Single outward jump
Single inward jump
BAND/REL
F4
FWD
REV
Lens shifted outwards while this key is pressed
Lens shifted inwards while this key is pressed

13.2 TUNER AUDIO SECTION

NOTICE:
Select C1 so that total capacity of 80pF is attained from the direction of the receiver jack.
Z: Output impedance of SSG.

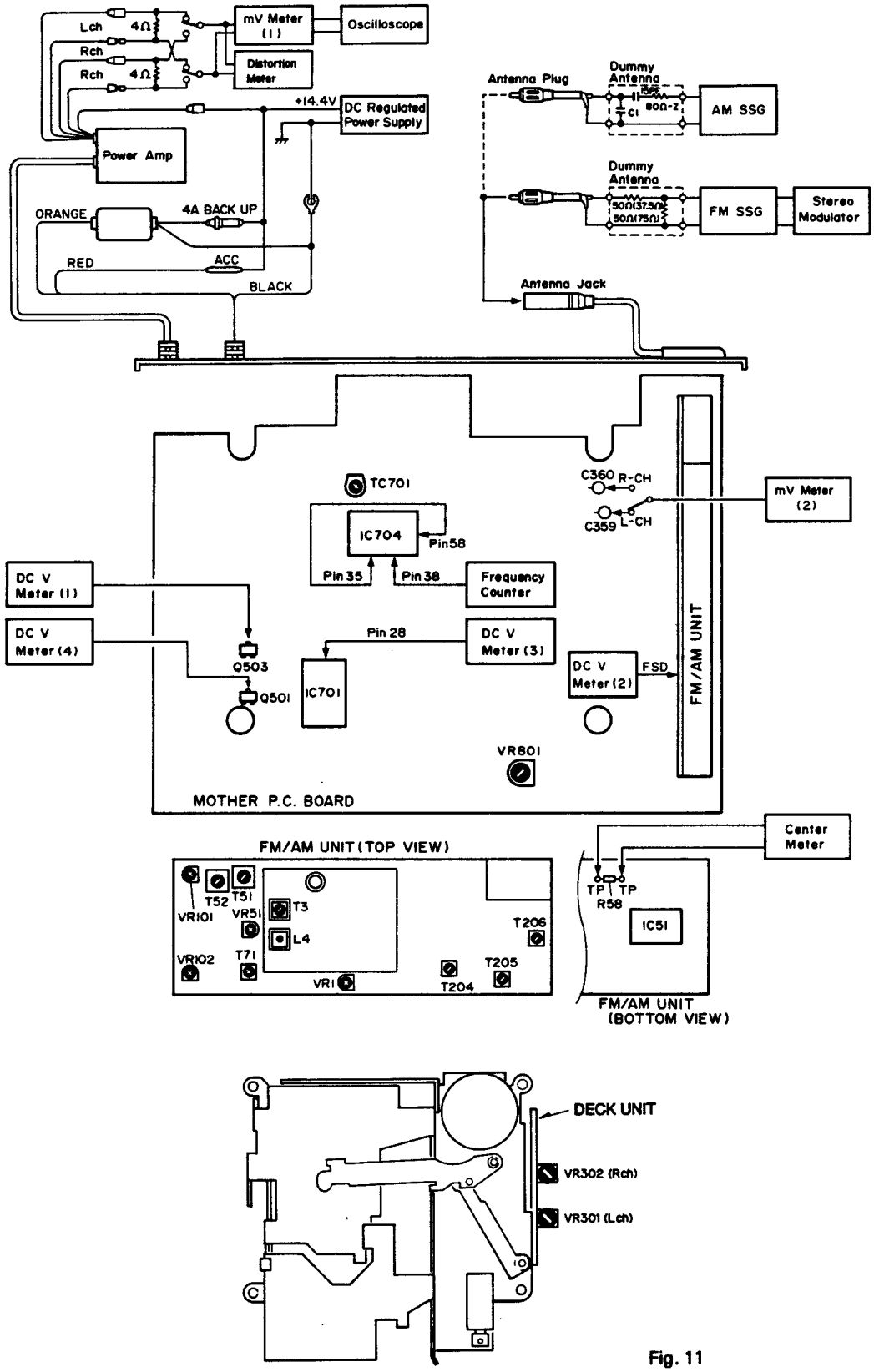

Fig. 11

FM ADJUSTMENT ※ Stereo MOD.: 1kHz, L+R=90%, Pilot=10%

	No.	FM SSG (400Hz, 100%)		Displayed Frequency (MHz)	Adjusting Point	Adjustment Method (Switch Position)
		Frequency (MHz)	Level (dBf)			
Front End	1			108.0	L4	DC V Meter (1): 7.3±0.2V
	2			87.5	——	Verify that DC V Meter (1) is more than 1.4±0.6V.
	3	98.1	10	98.1	T3	mV Meter (1): Maximum
IF	1	98.1	65	98.1	T51	Center Meter: 0
	2	98.1	65	98.1	T52	Distortion Meter: Minimum
	3	Repeat No. 1-2 alternately so that the center meter indicates the 0 output and distortion meter indicates the minimum output.				
	4	98.1	13	98.1	T71	Oscilloscope: Optimum Symmetry
	5	※98.1	65	98.1	T71	Distortion Meter: Minimum (Rotate T71 less than ±90°)
Soft Mute	1	98.1	65	98.1	—	mV Meter (1): A dB (FM STEREO MODE)
	2	98.1	14	98.1	VR102	mV Meter (1): A-3 dB (FM STEREO MODE)
ARC	1	※98.1	39	98.1	VR101	mV Meter (1): Separation 5 dB (FM STEREO MODE)
SD	1	98.1	20	98.1	VR51	DC V Meter (2): Approx. 5V
	2	98.1	19	98.1	—	Verify that DC V Meter (2) is approx. 0V
	3	98.1	60	98.1	VR1	DC V Meter (2): Approx. 5V
	4	98.1	59	98.1	—	Verify that DC V Meter (2) is approx. 0V
RDS	1	98.1	35	98.1	VR801	DC V Meter (3): 1.2±0.05V

MW/LW ADJUSTMENT

	No.	AM SSG (400Hz, 30%)		Displayed Frequency (kHz)	Adjusting Point	Adjustment Method (Switch Position)
		Frequency (kHz)	Level (dBμV)			
Tuning Volt	1	—	—	153	—	Verify that DC V Meter (4) is more than 2.0V.
	2	—	—	1,602	—	Verify that DC V Meter (4) is less than 6.5V.
	3	999	25	999	T204, 205, 206	mV Meter (1) : Maximum

CLOCK ADJUSTMENT

No.	Adjusting Point	Adjustment Method (Switch Position)
1		Pin 35 (TEST) of IC704 connect to pin 58 (VDD) of IC704
2	TC701	Frequency Counter : 1.048576MHz±2Hz

DOLBY NR ADJUSTMENT

No.	Cassette Tape	Adjusting Point	Adjustment Method (Switch Position)
1	NCT-150 (400Hz, 200nwb/m)	VR301 (Lch) VR302 (Rch)	mV Meter (2) : -8.2dBs+1.5dB -0.5dB (DOLBY NR Switch:OFF)

•ICs

CWV1020

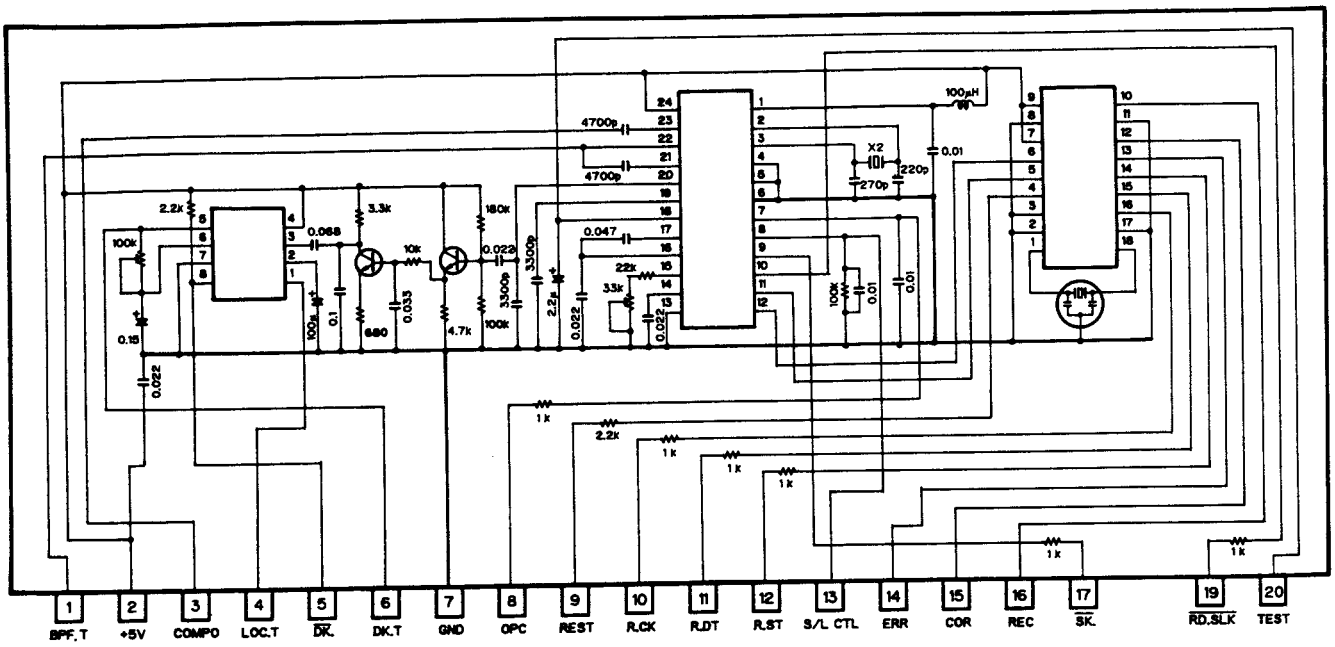

CWV1025

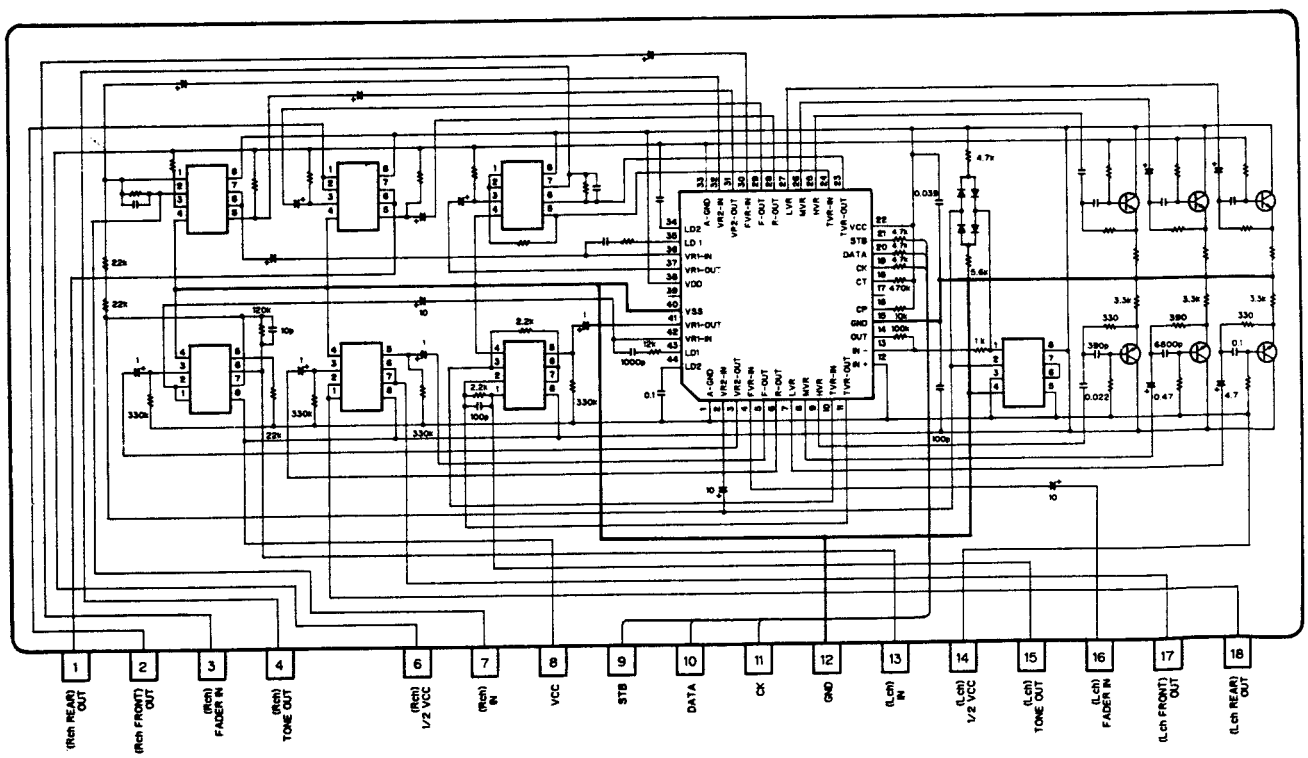

HA12161FP

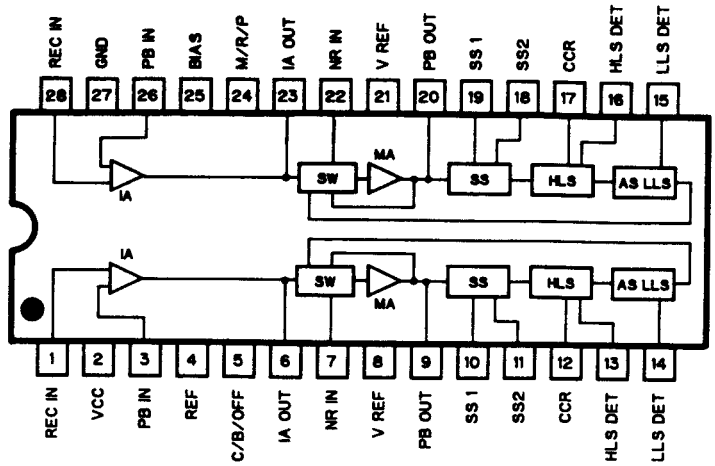

RC4558MD
RC2068MD
UPC4570G

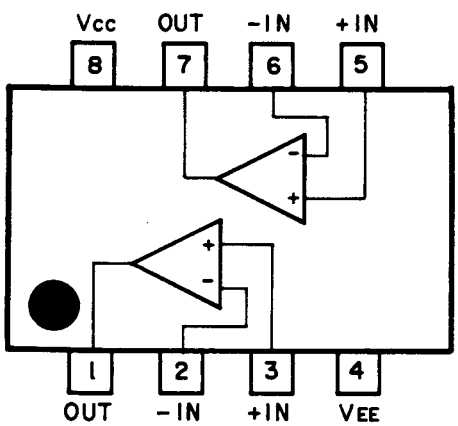

TC74HC125AF

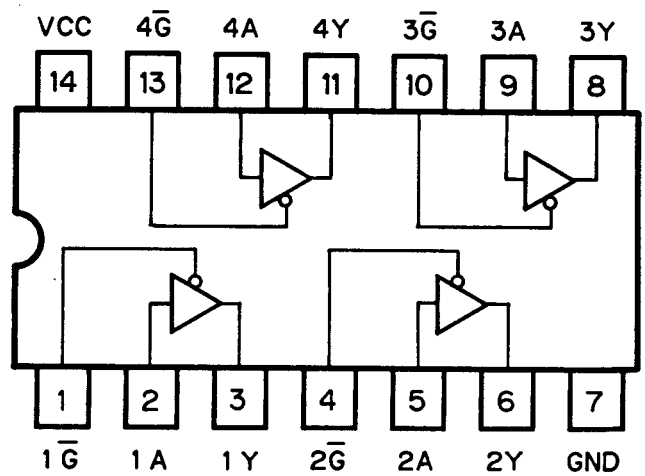

BA3430FS

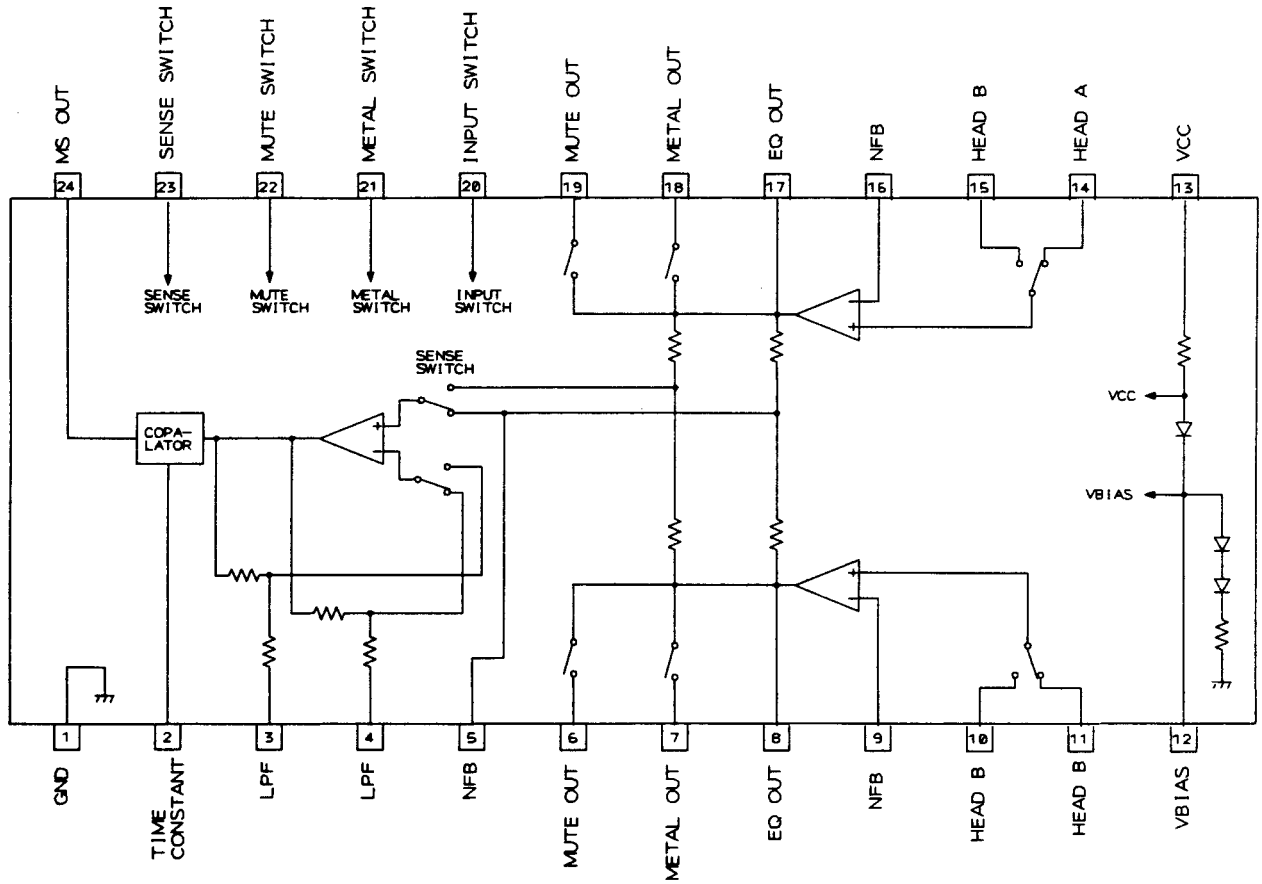

S-80740AH-B4
S-80734AN-DY

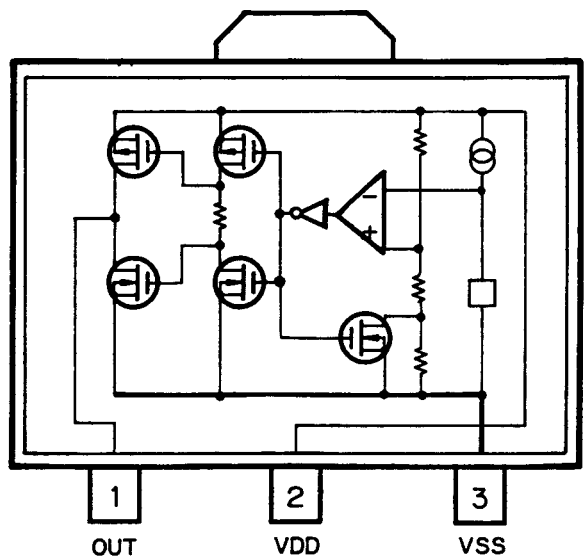

PD4285

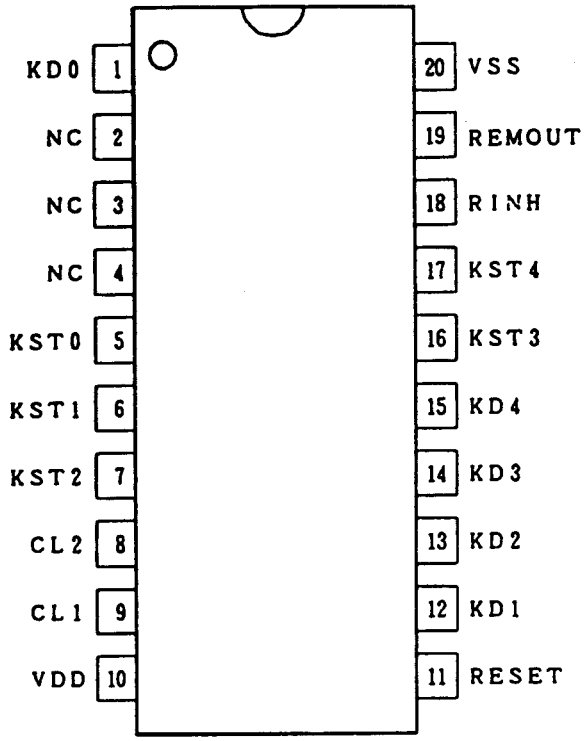

•Pin Functions (PD4285)

Pin No.	Pin Name	I/O	Output Format	Function and Operation
1	KDD	INPUT		Key return input
2—4	NC			
5—7	KST0—KST2	OUTPUT	NM	Key strobe output
8	CL2			System clock generator connector pin
9	CL1			System clock generator connector pin
10	VDD			
11	RESET	INPUT		Reset input
12—15	KD1—KD4	INPUT		Key return input
16, 17	KST3, KST4	OUTPUT	NM	Key strobe output
18	RINH	OUTPUT	NM	Remote controller OFF output when key data is outputed
19	REMOUT	OUTPUT	NM	Remote controller data output
20	VSS			GND

Output Format	Meaning
NM	Neutral resistivity N channel open drain

PA4018

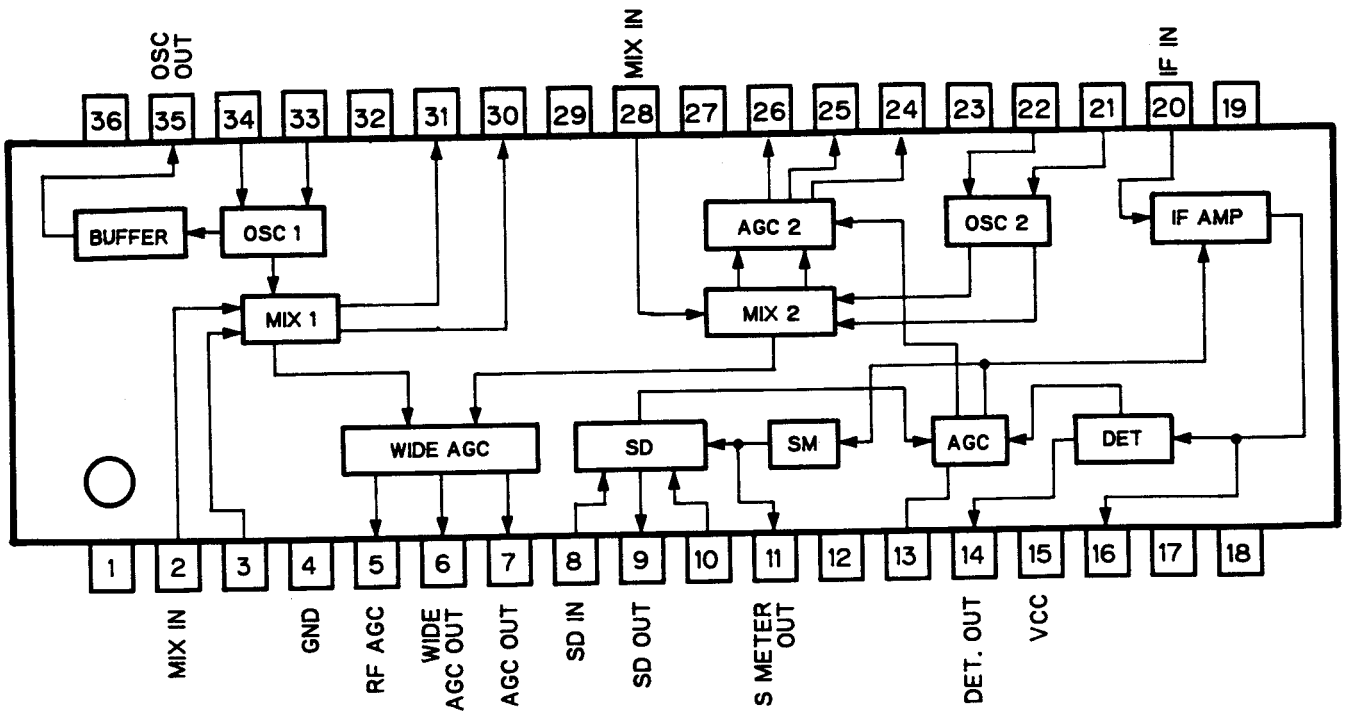

PA4012B

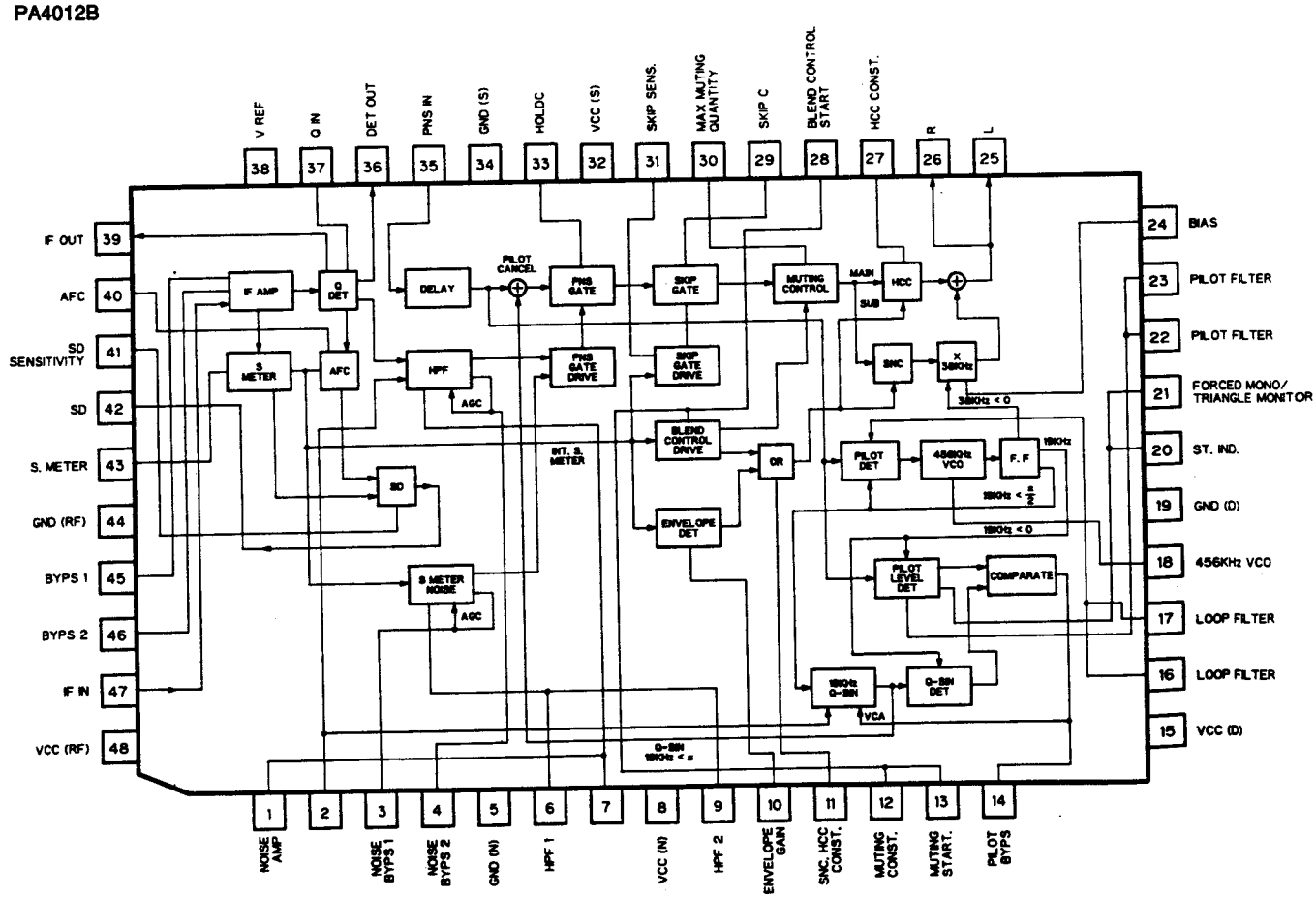

CXK5816M-15L

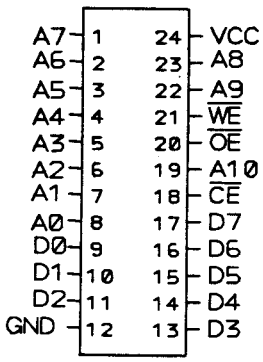

* PD4271C

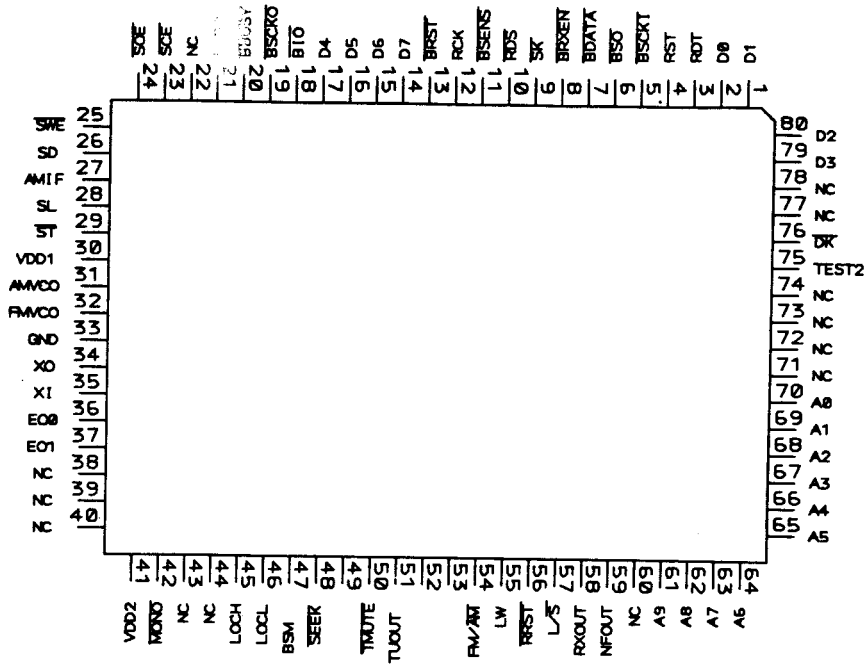

*IC's marked by * are MOS type.*
Be careful in handling them because they are very liable to be damaged by electrostatic induction.

•Pin Functions (PD4271C)

Pin No.	Pin Name	I/O	I/O Format	Function and Operation
1, 2	D1, D0	I/O	C	SRAM data input/output pin
3	RDT	Input	N	RDS error correction data input pin
4	RST	Input	N	RDS data start input pin
5	$\overline{\text{BSCKI}}$	Input	C	Serial clock input pin
6	$\overline{\text{BSO}}$	Output	C	Serial data output pin
7	$\overline{\text{BDATA}}$	Input	C	Serial data input pin
8	$\overline{\text{BRXEN}}$	Input	C	Bus communication reception enable input pin
9	$\overline{\text{SK}}$	Input	C	SK signal input pin
10	$\overline{\text{RDS}}$	Input	C	RDS signal lock input pin
11	$\overline{\text{BSENS}}$	Input		Back up power sense input pin
12	RCK	Input		RDS data clock input pin
13	$\overline{\text{BRST}}$	Input	C	Bus communication reset input pin
14 – 17	D7 – D4	I/O	C	SRAM data input/output pin
18	$\overline{\text{BIO}}$	Output	N	Bus transmission/reception control output pin "H":reception, "L":transmission
19	$\overline{\text{BSCKO}}$	Output	N	Serial clock output pin
20	$\overline{\text{BBUSY}}$	Output	N	Bus communication busy output pin

Pin No.	Pin Name	I/O	I/O Format	Function and Operation
21	BSRQ	Output	C	Bus communication service request output pin
22	NC			Not used
23	$\overline{SCE}$	Output	C	SRAM chip enable output pin
24	$\overline{SOE}$	Output	C	SRAM output enable output pin
25	$\overline{SWE}$	Output	C	SRAM read/write output pin "H":read, "L":write
26	SD	Input	C	SD signal input pin
27	AMIF	Input	C	AM IF input pin
28	SL	Input	C	Signal level input pin
29	$\overline{ST}$	Input	C	Stereo broadcast detection signal input pin
30	VDD1			Device power supply terminal
31	AMVCO	Input		AM VCO signal input pin
32	FMVCO	Input		FM VCO signal input pin
33	GND			GND
34	XO	Output		Crystal oscillating element connection pin
35	XI	Input		Crystal oscillating element connection pin
36	EO0	Output		PLL error output pin (Not used)
37	EO1	Output		PLL error output pin
38 – 40	NC			Not used
41	VDD2			Device power supply pin
42	$\overline{MONO}$	Output	C	Forced mono output pin
43, 44	NC			Not used
45	LOCH	Output	C	Local H setup output pin
46	LOCL	Output	C	Local L setup output pin
47	BSM	Output	C	Outputs high signal during BSM local SEEK operation.
48	$\overline{SEEK}$	Output	C	SEEK output pin Outputs low signal during SEEK operation.
49	NC			
50	$\overline{TMUTE}$	Output	C	Tuner mute output pin
51	TUOUT	Output	C	Tuner/CD multi audio signal switching control pin "H":Tuner, "L":CD multi
52, 53	NC			
54	FM/$\overline{AM}$	Output	C	FM/AM power select output pin "H":FM, "L":AM
55	LW	Output	C	Loop filter switching output pin "H":LW
56	$\overline{RRST}$	Output	C	RDS data reset output pin
57	L/$\overline{S}$	Output	C	RDS decoder time constant select output pin
58	RXOUT	Output	C	RX output pin
59	NFOUT	Output	C	NF output pin
60	NC			Not used
61 – 70	A9 – A0	Output	C	SRAM address output pin
71 – 74	NC			Not used
75	TEST2	Input	RDW	TEST mode input pin
76	$\overline{DK}$	Input	RDW	DK signal input pin
77, 78	NC			Not used
79, 80	D3, D2	I/O	C	SRAM data input/output pin

I/O Format	Meaning
C	CMOS Output
N	N channel open drain
RDW	With pull down resistor

* PD4294

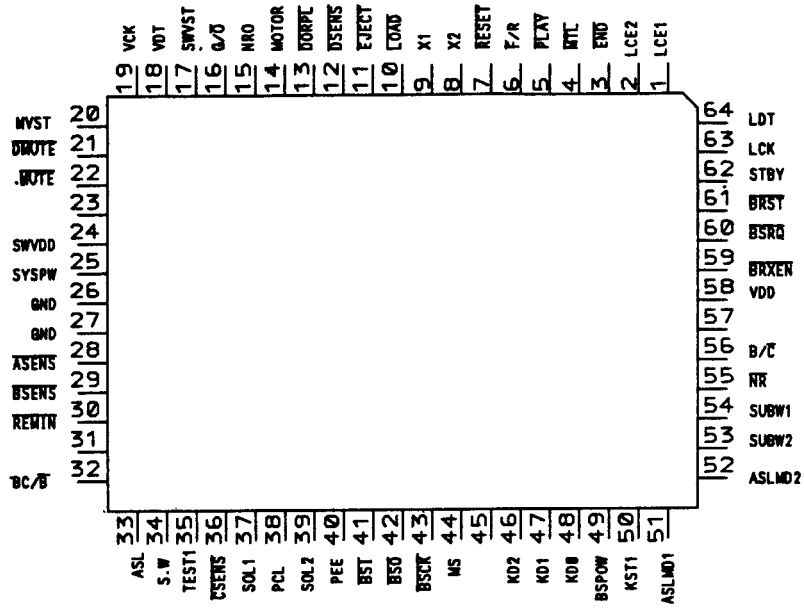

•Pin Functions (PD4294)

Pin No.	Pin Name	I/O	I/O Format	Function and Operation
1	LCE1	Output	C	Chip enable or strobe output for LCD driver IC
2	LCE2	Output	C	Chip enable or strobe output for LCD driver IC
3	END	Input		Deck END sensor input
4	MTL	Input		Deck METAL (70 µ S) sensor input
5	PLAY	Input		Deck head position (PLAY) sensor input
6	F/R	Input		Deck FWD/REV sensor input
7	RESET	Input		Reset input
8	X2			Crystal oscillating element connection pin
9	X1			Crystal oscillating element connection pin
10	LOAD	Input		Deck LOAD/EJECT sensor input
11	EJECT	Input		Eject signsl input
12	DSENS	Input		Front panel EJECT/REPLACE sensor input
13	DORPL	Output	C	Strobe for front panel open solenoid control
14	MOTOR	Output	C	Deck main motor control output
15	NRO	Output	C	Deck FWD/REV head selector output
16	G/O	Output	C	Illumination green/amber selector output
17	SWVST	Output	C	Strobe output for sub woofer electronic volume
18	VDT	Output	C	Data output for electronic volume
19	VCK	Output	C	Clock output for electronic volume

Pin No.	Pin Name	I/O	I/O Format	Function and Operation
20	MVST	Output	C	Strobe output for electronic volume
21	$\overline{\text{DMUTE}}$	Output	C	Deck mute output
22	$\overline{\text{MUTE}}$	Output	C	System mute output
23	TAPPW	Output	C	Deck power supply control
24	SWVDD	Output	C	Power supply control output for IC901
25	SYSPW	Output	C	System(power amp)power supply control
26, 27	GND			GND
28	$\overline{\text{ASENS}}$	Input		ACC power supply sensor input
29	$\overline{\text{BSENS}}$	Input		BACK UP power supply sensor input
30	REMIN	Input		Remote control pulse input
31	NC			
32	BC/$\overline{\text{B}}$	Input		Dolby NR BC/B select input
33	ASL	Input		ASL select input
34	SW	Input		Sub woofer select input
35	TEST	Input		Not used
36	$\overline{\text{CSENS}}$	Input		Front panel OPEN/CLOSE sensor input
37	SOL1	Output	C	Output for deck solenoid 1 (head position)
38	PCL	Output	C	Clock adjustment test point
39	SOL2	Output	C	Output for deck solenoid 2 (DIR selector and EJECT)
40	PEE	Output	C	Beep tone output
41	BSI	Input		Bus serial data input
42	BSO	Output	C	Bus serial data output
43	$\overline{\text{BSCK}}$	Input/ Output	C	Bus serial clock input/output
44	MS	Input		Music signal input
45	NC			
46～48	KD2～KD0	Input		Key return input
49	BSPOW	Output	C	Bus mute output
50	KST1	Output	N	Key strobe output for ASL
51	ASLMD1	Output	N	ASL mode 1
52	ASLMD2	Output	N	ASL mode 2
53	SUBW2	Output	N	Sub woofer fc select output
54	SUBW1	Output	N	Sub woofer fc select output
55	$\overline{\text{NR}}$	Output	C	Dolby NR ON/OFF output
56	B/$\overline{\text{C}}$	Output	C	Dolby NR B/C selector output
57	NC			
58	VDD			
59	$\overline{\text{BRXEN}}$	Input/ Output	C	Bus reception enable line
60	$\overline{\text{BSRQ}}$	Input		Data communications serial poll request
61	$\overline{\text{BRST}}$	Output	C	Bus reset
62	STBY	Output	C	Power amp stand-by output pin
63	LCK	Output	C	Clock output for LCD drivers
64	LDT	Output	C	Data output for LCD drivers

Output Format	Meaning
C	CMOS Output
N	N channel open drain

TA8214K

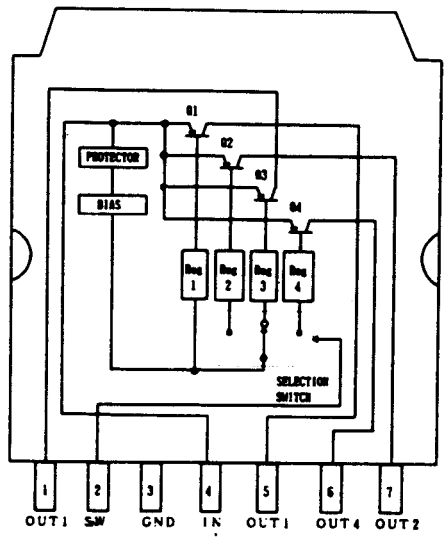

LC7582A

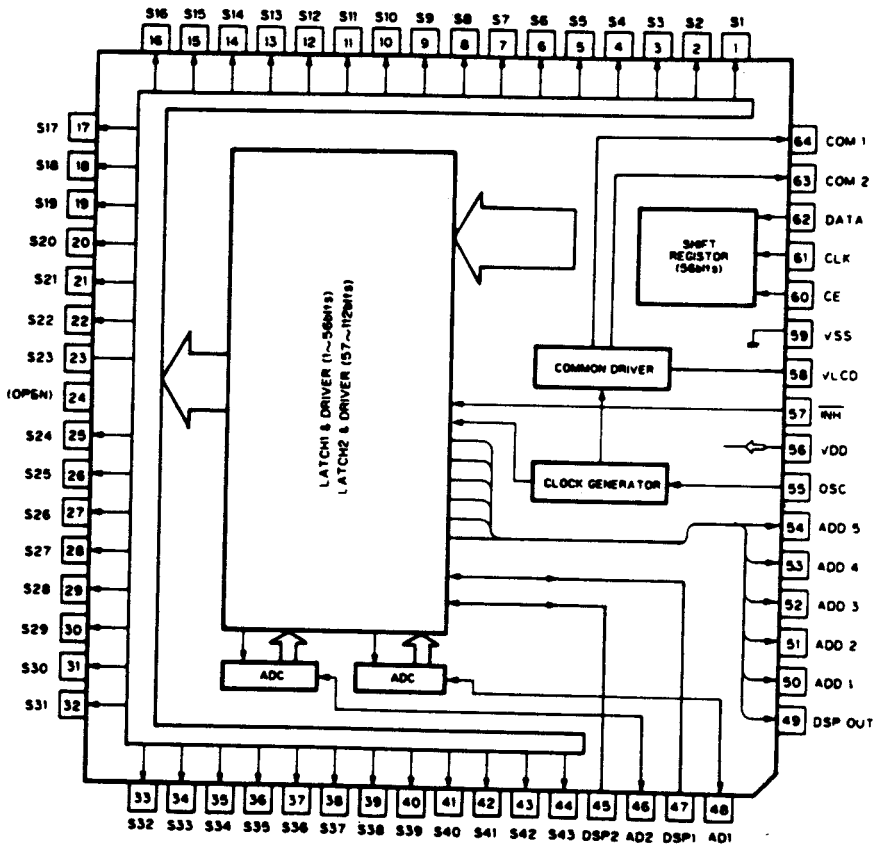

MC14052BF

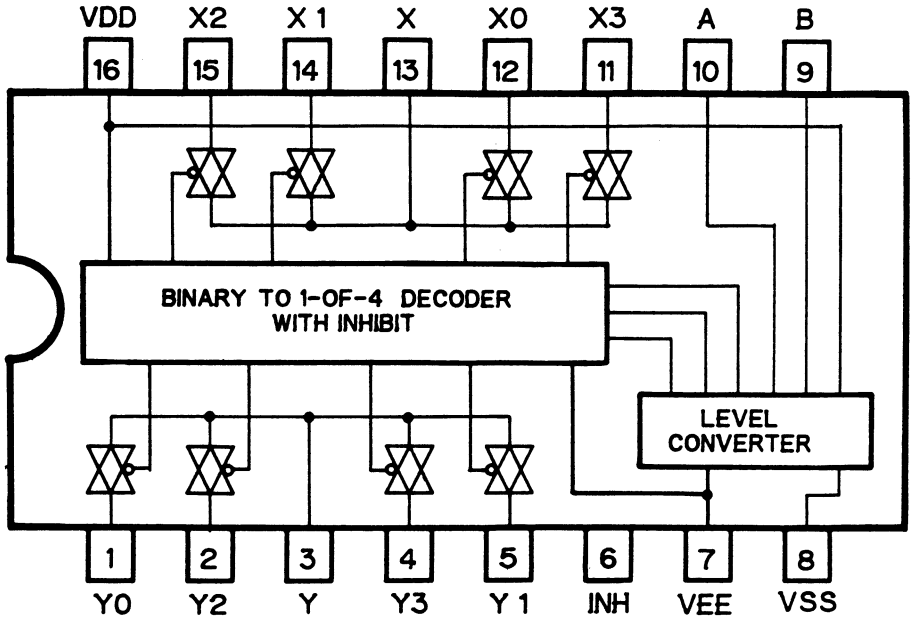

TC9213P

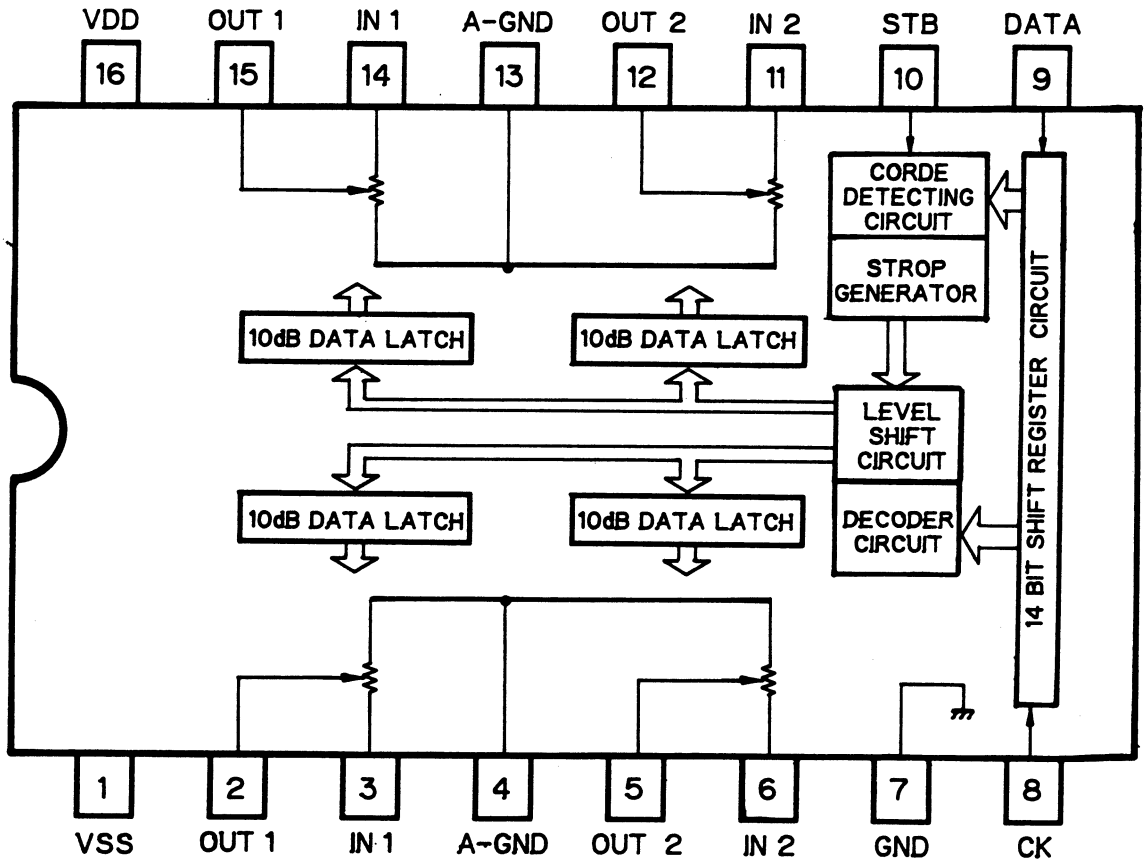

PM2002

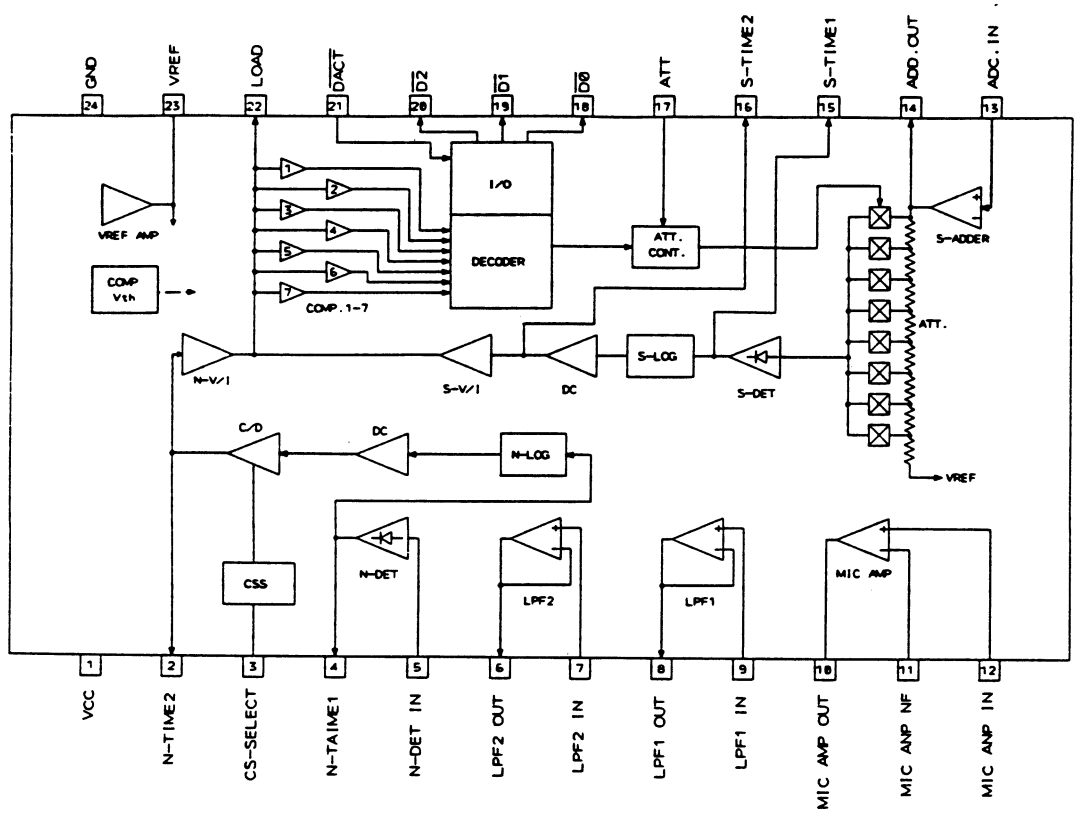

•FM FRONT END (CWB1059)

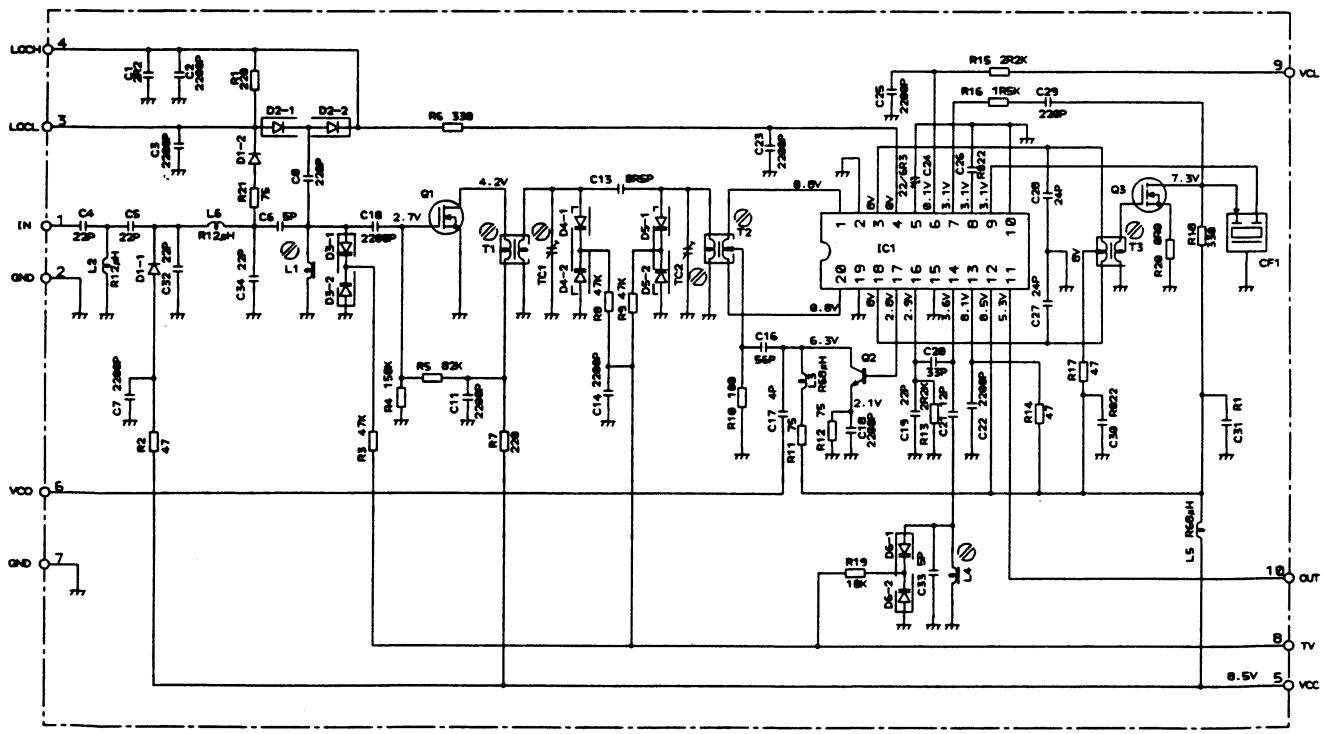

NOTE :

Symbol indicates a resistor.
No differentiation is made between chip resistors and discrete resistors.

Symbol indicates a capacitor.
No differentiation is made between chip capacitors and discrete capacitors.

Decimal points for resistor and capacitor fixed values are expressed as:
2.2→2R2
0.022→R022

•LCD (CAW1120)

SEGMENT

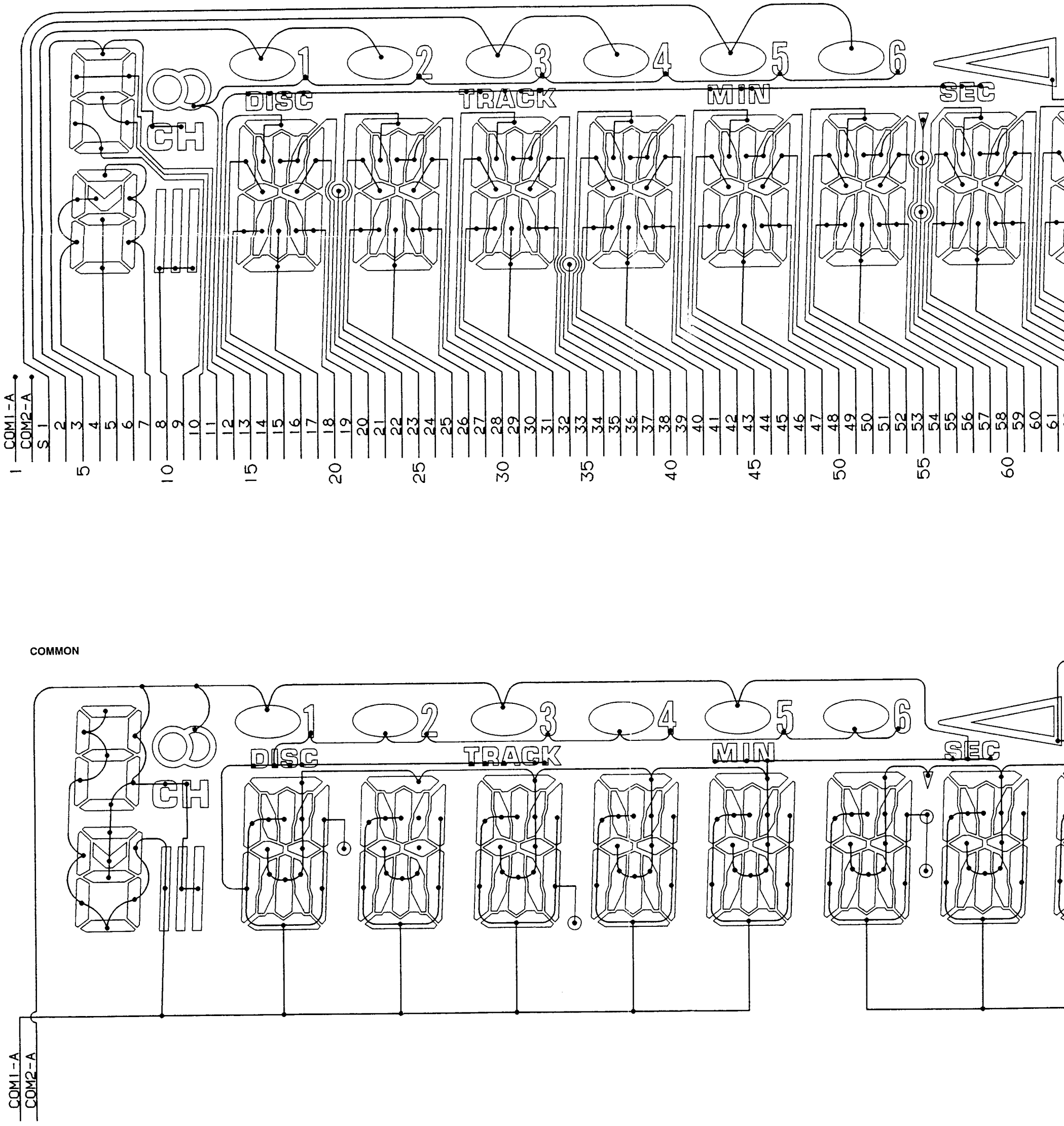

COMMON

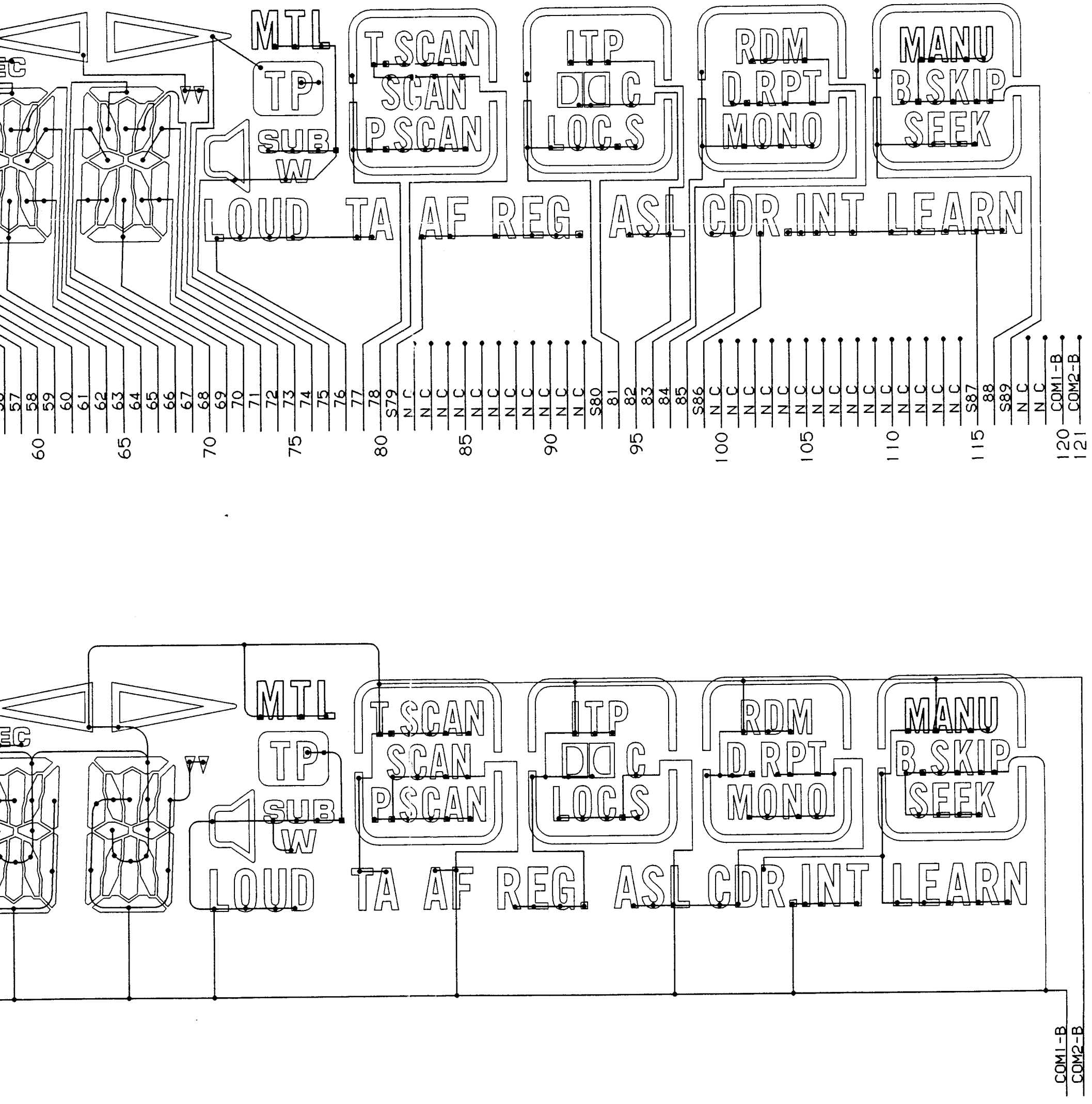
MTL
TP
SUB W
T.SCAN
SCAN
P.SCAN
ITP
D C
LOC.S
RDM
D.RPT
MONO
MANU
B.SKIP
SEEK
LOUD
TA
AF
REG.
ASL
CDR.INT
LEARN
60
65
70
75
80
85
90
95
100
105
110
115
120
121
S79
S80
S86
S87
S89
COM1-B
COM2-B

Fig. 12

14. SCHEMATIC CIRCUIT DIAGRAM

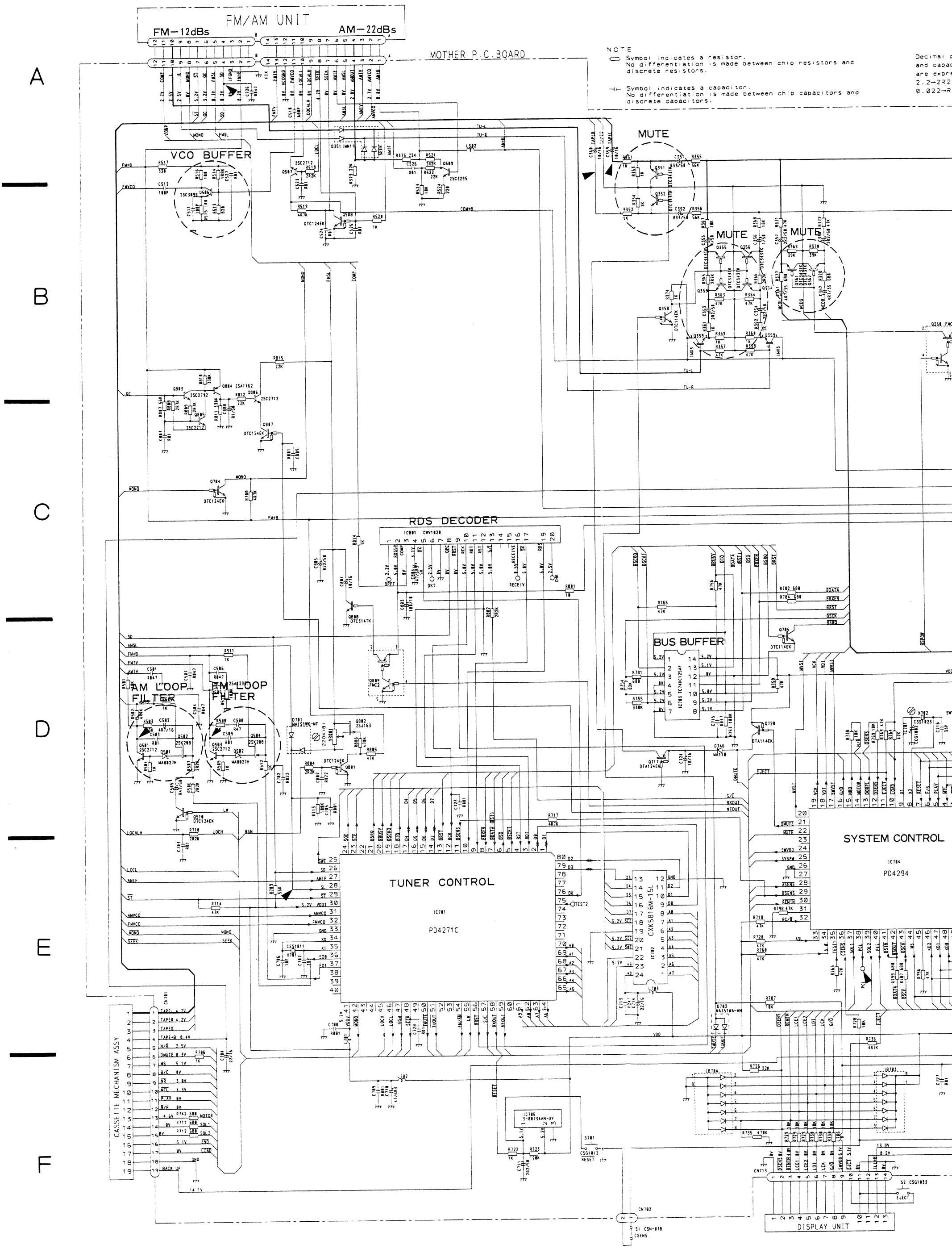

Decimal points for resistor and capacitor fixed values are expressed as:
2.2→2R2
0.022→R022

AUDIO TUNER UNIT
Consists of
MOTHER P.C.BOARD
ASL SUB WOOFER P.C.BOARD

ASL SUB WOOFER P.C.BOARD
SUB WOOFER
CN709
−17dBs
ELECTRONIC VOLUME
IC481 CXW1570
−18dBs BUFFER
MUTE
−2dBs
−4dBs
FL
FR
IC851 RC2868MD
1/2VCC REGULATOR
IC482 UPC4570G
BUFFER
MUTE
RL
RR
IC852 RC2868MD
REGULATOR
IC951 TA8214K
OFF MUTE
ACC
−18dBs
TO CD MULTI PLAYER
ACC SENSER
BACK UP SENSER
VDD REGULATOR
SOLENOID DRIVER
B REMOTE
GND
BACK UP
ACC
SWITCHES
©MISCELLANEOUS
S1 :CSENS SWITCH ..... ON−OFF
The underlined indicates the switch position.

Fig. 13

15. CONNECTION DIAGRAM

IC , Q

ADJ

MOTHER P.C. BOARD

TO FM/AM UNIT

TO CASSETTE MECHANISM ASSY

TO DISPLAY UNIT

A

B

C

D

Q362

Q361

IC401

Q715

Q714

Q352 Q306

Q707 Q716

Q728 Q938

Q353 Q713 Q952 TC701

Q509

Q717

Q508 Q956

Q712 Q711

Q507 IC704

Q706 Q951

Q353

Q705 Q506

Q354 IC402

Q953

Q356 Q957

Q863

IC852 IC851

IC703

Q864

Q855

Q505 Q503

Q358 Q504

Q805

Q803 Q856

Q502 Q701

Q704

IC701

Q804 Q806

Q510 Q501

Q808

Q807 Q880

Q720 Q702

IC861

Q359 Q935

Q84 Q954

IC706 VR801

Q802 IC702

Q708

Q709 Q703

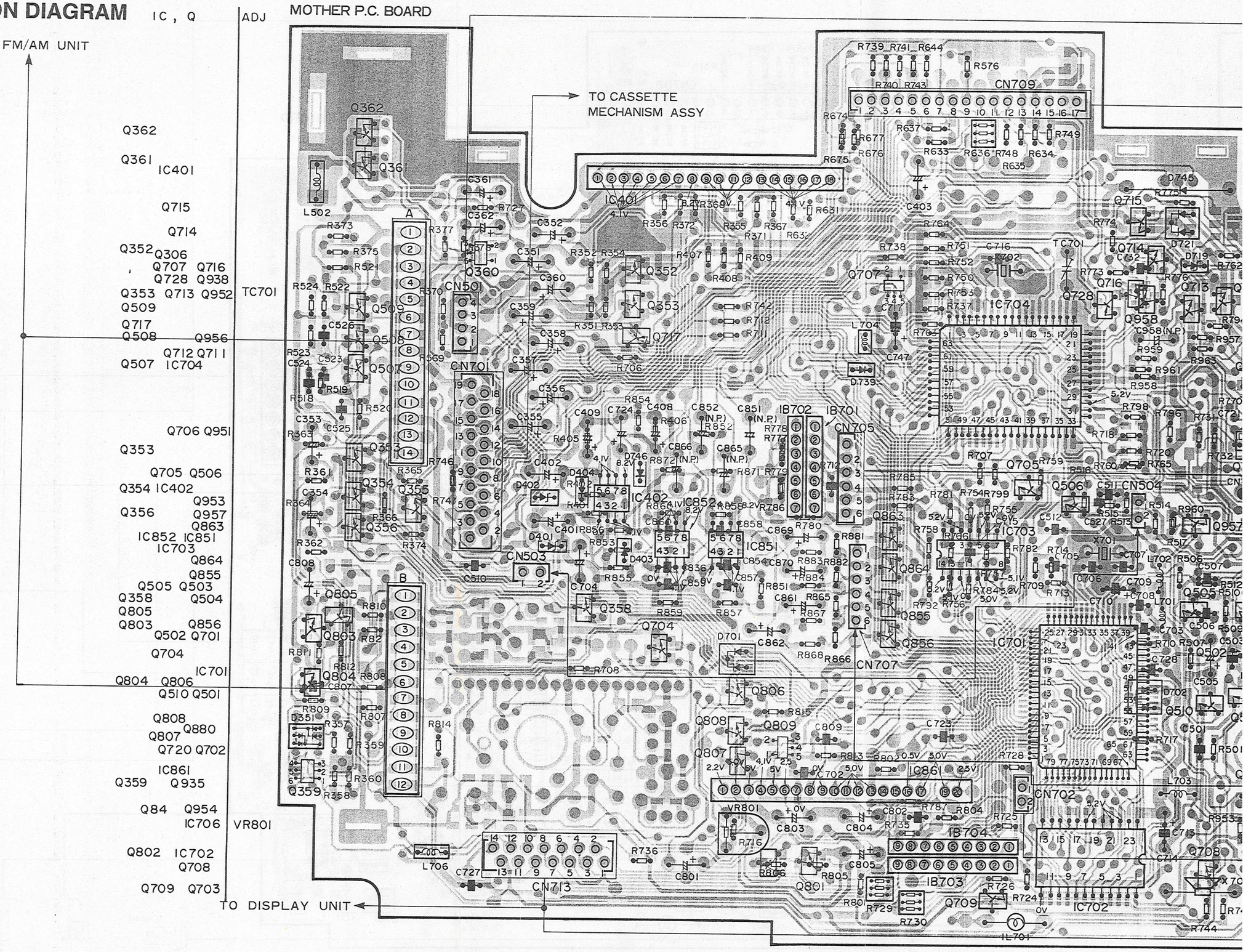

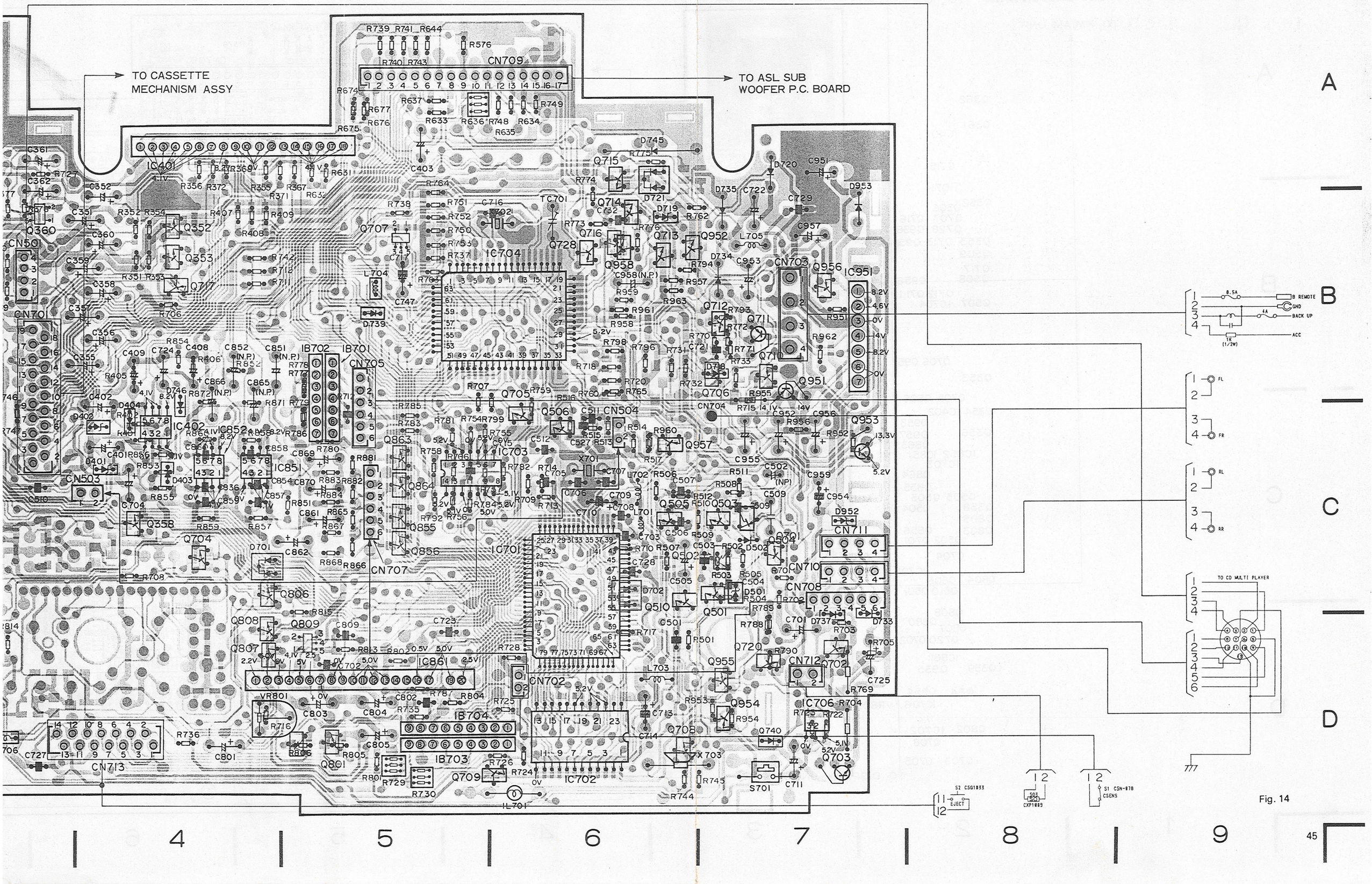
TO CASSETTE MECHANISM ASSY
TO ASL SUB WOOFER P.C. BOARD
TO CD MULTI PLAYER
B REMOTE
GND
BACK UP
ACC
FL
FR
RL
RR
EJECT
CSENS

Fig. 14

16. CIRCUIT DIAGRAM AND P. C. BOARDS PATTERN

16.1 DISPLAY UNIT

NOTE :

Symbol indicates a resis
No differentiation is ma
discrete resistors.

Symbol indicates a capac
No differentiation is ma
discrete capacitors.

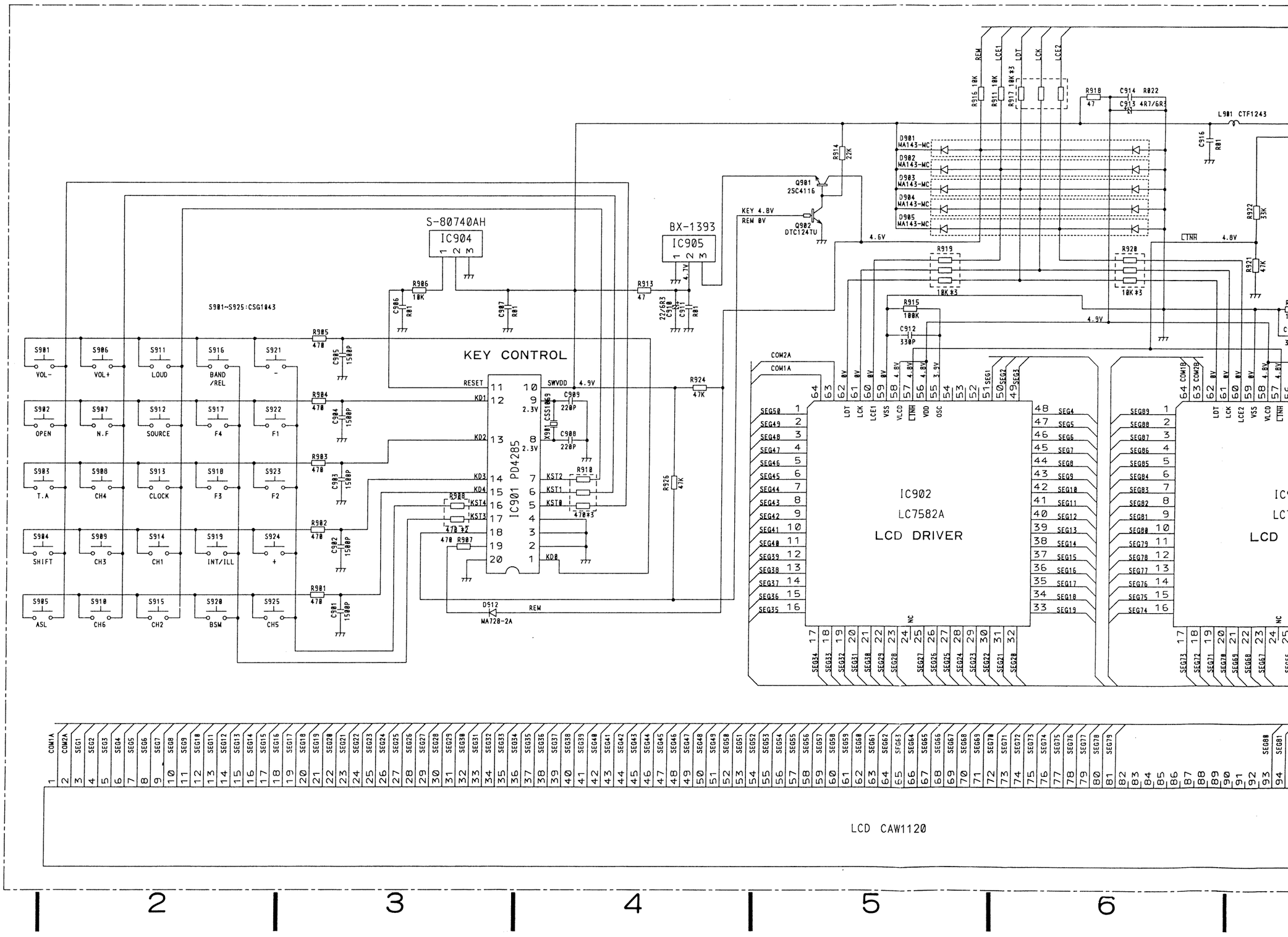

NOTE :

Symbol indicates a resistor.
No differentiation is made between chip resistors and discrete resistors.

Symbol indicates a capacitor.
No differentiation is made between chip capacitors and discrete capacitors.

Decimal points for resistor and capacitor fixed values are expressed as:
2.2→2R2
0.022→R022

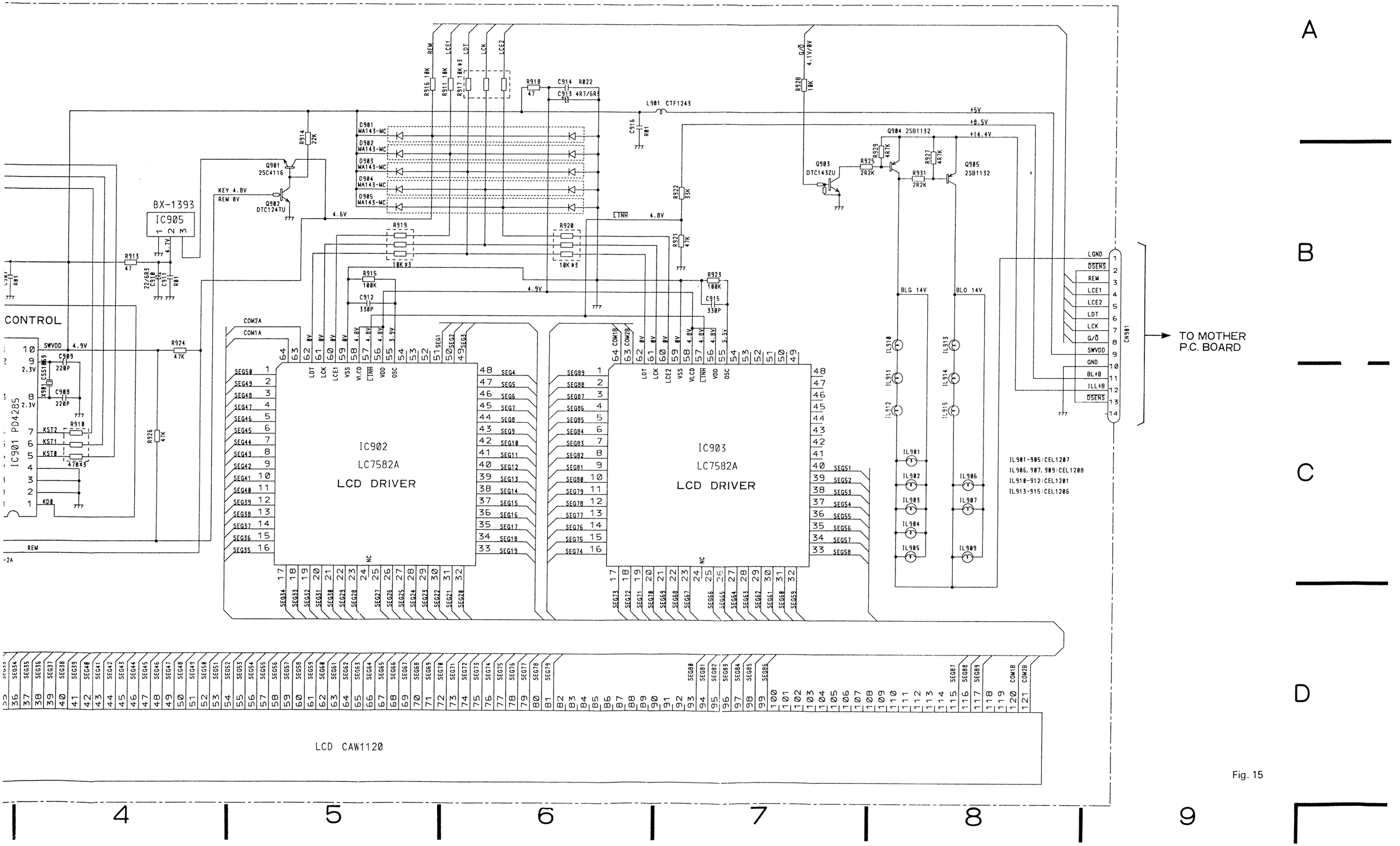

Fig. 15

IC ,Q ADJ

IC905 Q904 Q905
Q902 Q901 Q903

IC901

I904

IC903

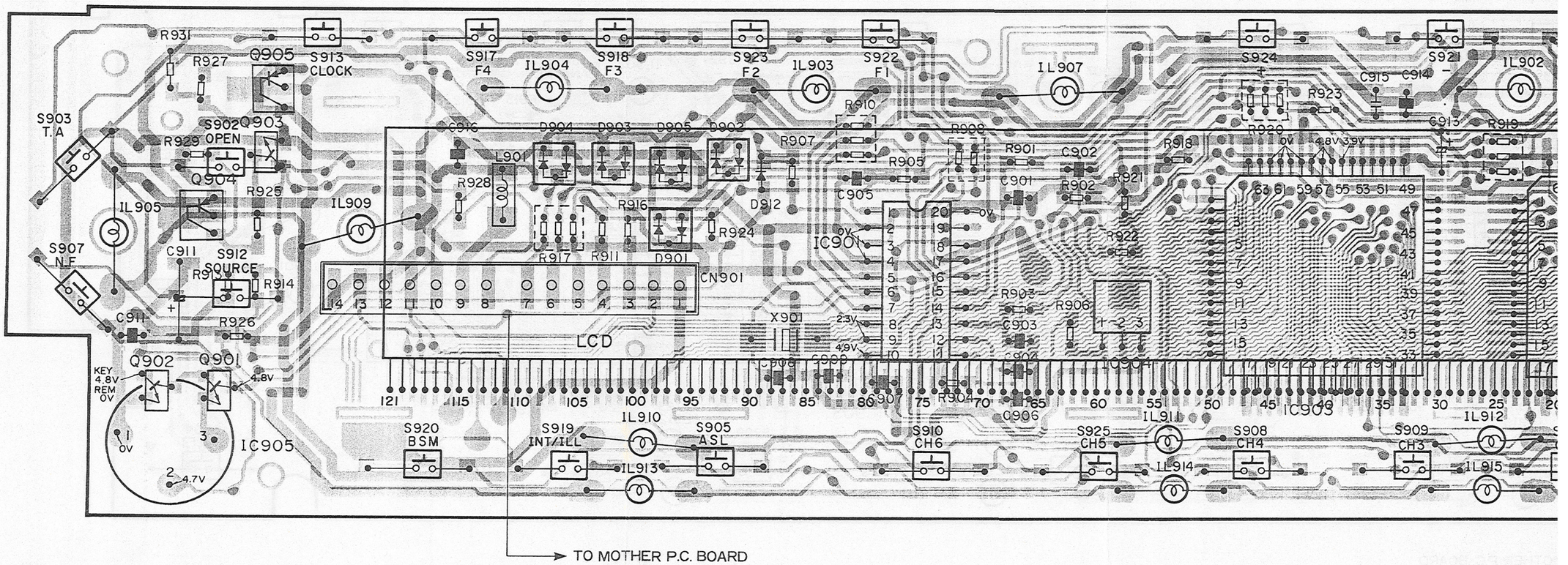

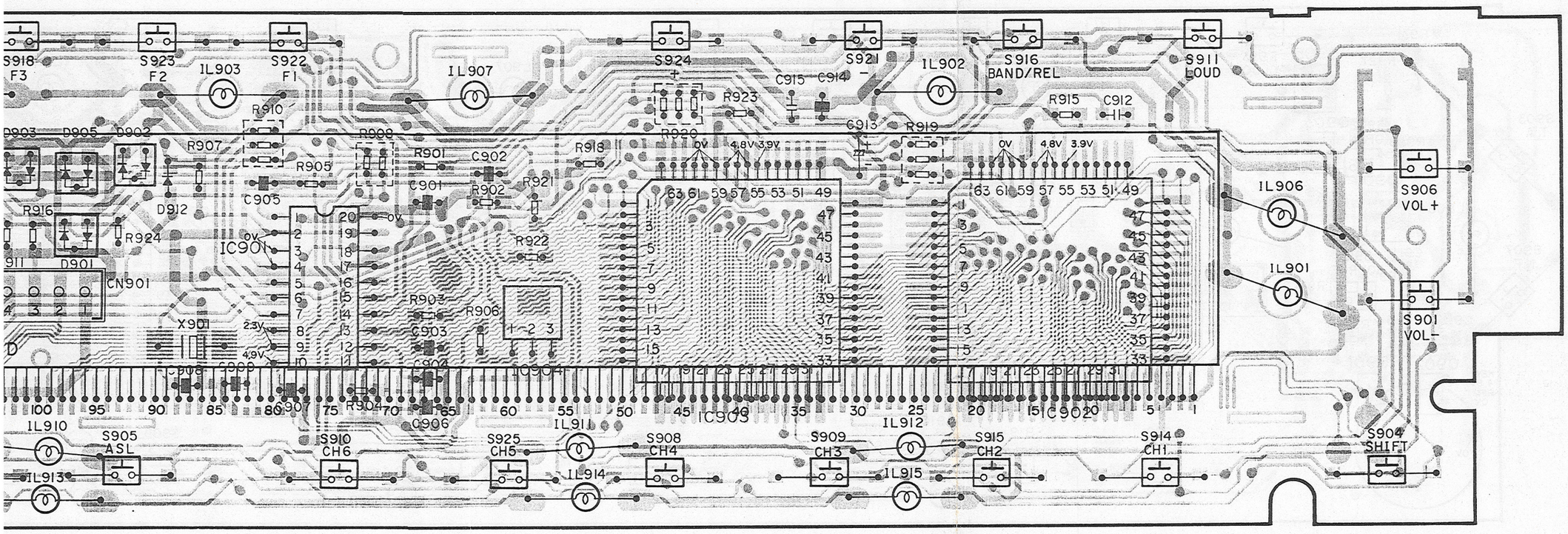

MOTHER P.C. BOARD

Fig. 16

16.2 CASSETTE MECHANISM ASSY

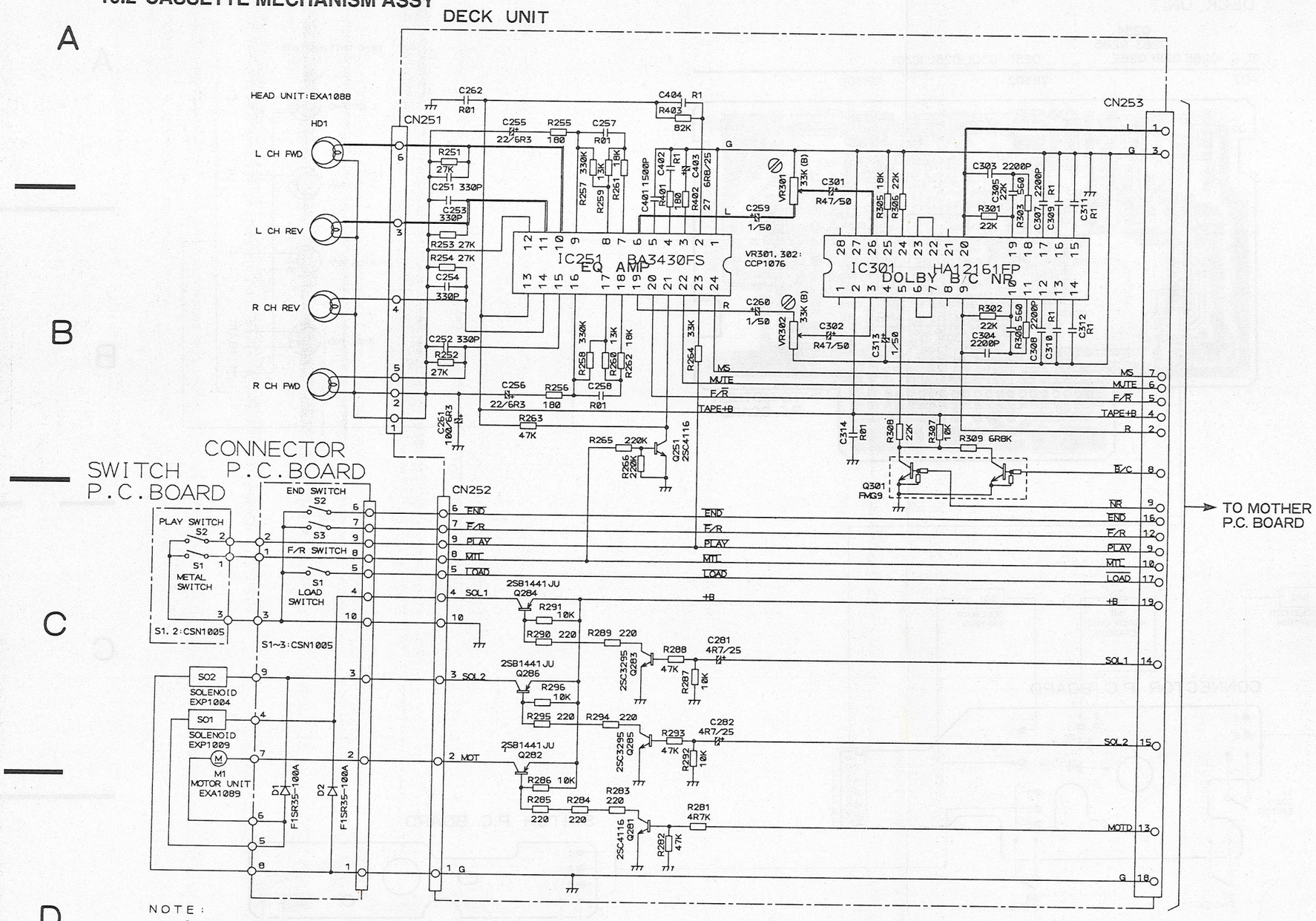

NOTE :

- Symbol indicates a resistor. No differentiation is made between chip resistors and discrete resistors.
- Symbol indicates a capacitor. No differentiation is made between chip capacitors and discrete capacitors.

Decimal points for resistor and capacitor fixed values are expressed as:
2.2→2R2
0.022→R022

DECK UNIT

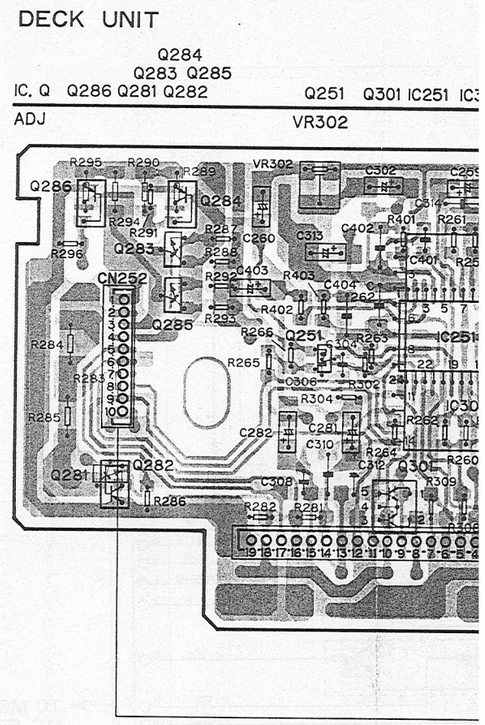

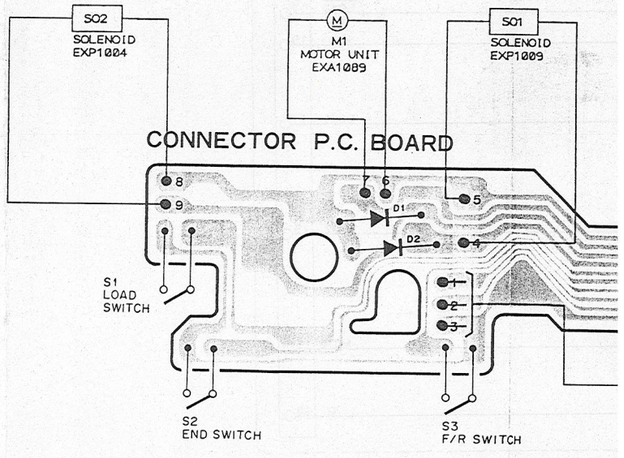

Fig. 17

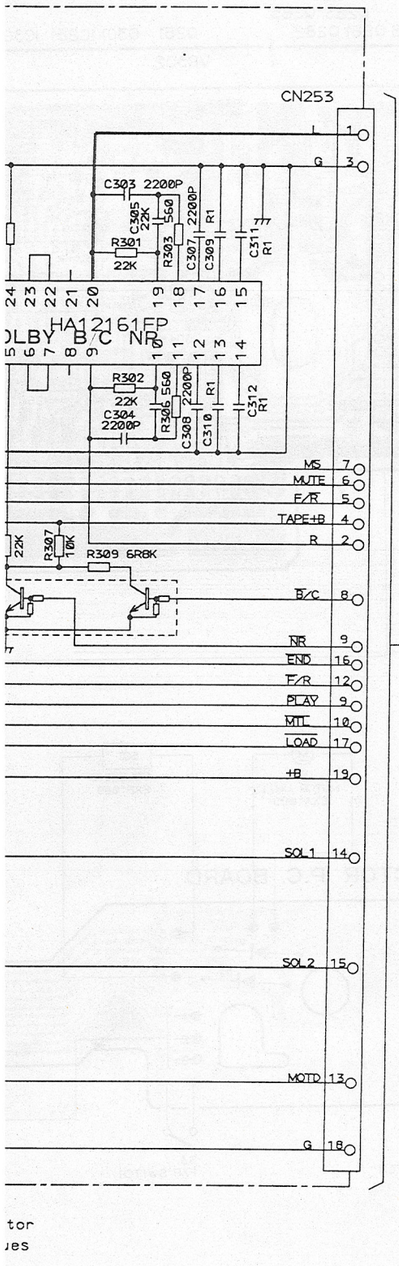
CN253
L 1
G 3
C303 2200P
R301 22K
R303 560
C307 2200P
C309 R1
C311 R1
HA12161FP
DOLBY B/C NR
R302 22K
C304 2200P
R306 560
C308 2200P
C310 R1
C312 R1
MS 7
MUTE 6
F/R 5
TAPE+B 4
R 2
R307 10K
R309 6RBK
B/C 8
NR 9
END 16
F/R 12
PLAY 9
MTL 10
LOAD 17
+B 19
SOL1 14
SOL2 15
MOTD 13
G 18
TO MOTHER P.C. BOARD

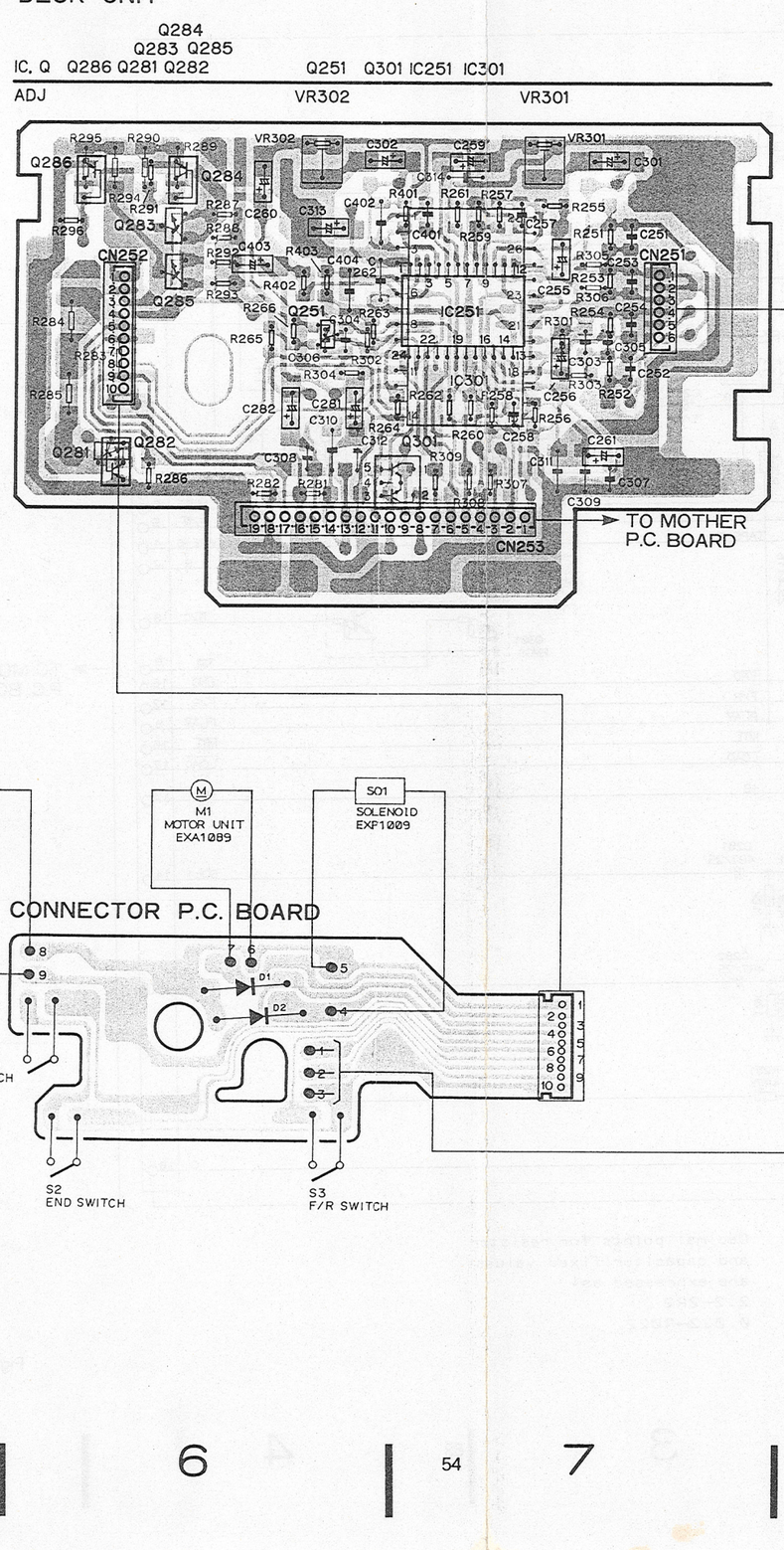
DECK UNIT
Q284
Q283 Q285
IC, Q Q286 Q281 Q282 Q251 Q301 IC251 IC301
ADJ VR302 VR301
CN252
CN251
CN253
TO MOTHER P.C. BOARD
SO2
SOLENOID EXP1004
M1
MOTOR UNIT EXA1089
SO1
SOLENOID EXP1009
CONNECTOR P.C. BOARD
S1 LOAD SWITCH
S2 END SWITCH
S3 F/R SWITCH

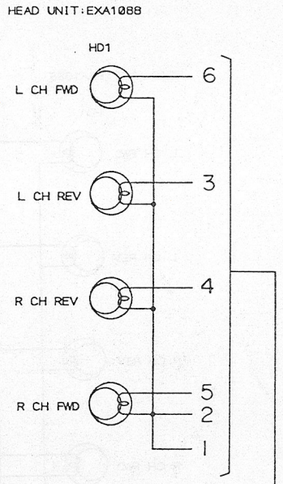
HEAD UNIT:EXA1088
HD1
L CH FWD 6
L CH REV 3
R CH REV 4
R CH FWD 5 2 1

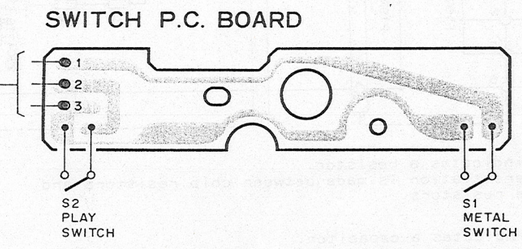
SWITCH P.C. BOARD
S2 PLAY SWITCH
S1 METAL SWITCH

Fig. 17

Fig. 18

16.3 ASL SUB WOOFER P. C. BOARD

NOTE:

⊣▭⊢ Symbol indicates a resistor.
No differentiation is made between chip resistors and discrete resistors.

⊣⊢ Symbol indicates a capacitor.
No differentiation is made between chip capacitors and discrete capacitors.

Decimal points for resistor and capacitor fixed values are expressed as:
2.2→2R2
0.022→R022

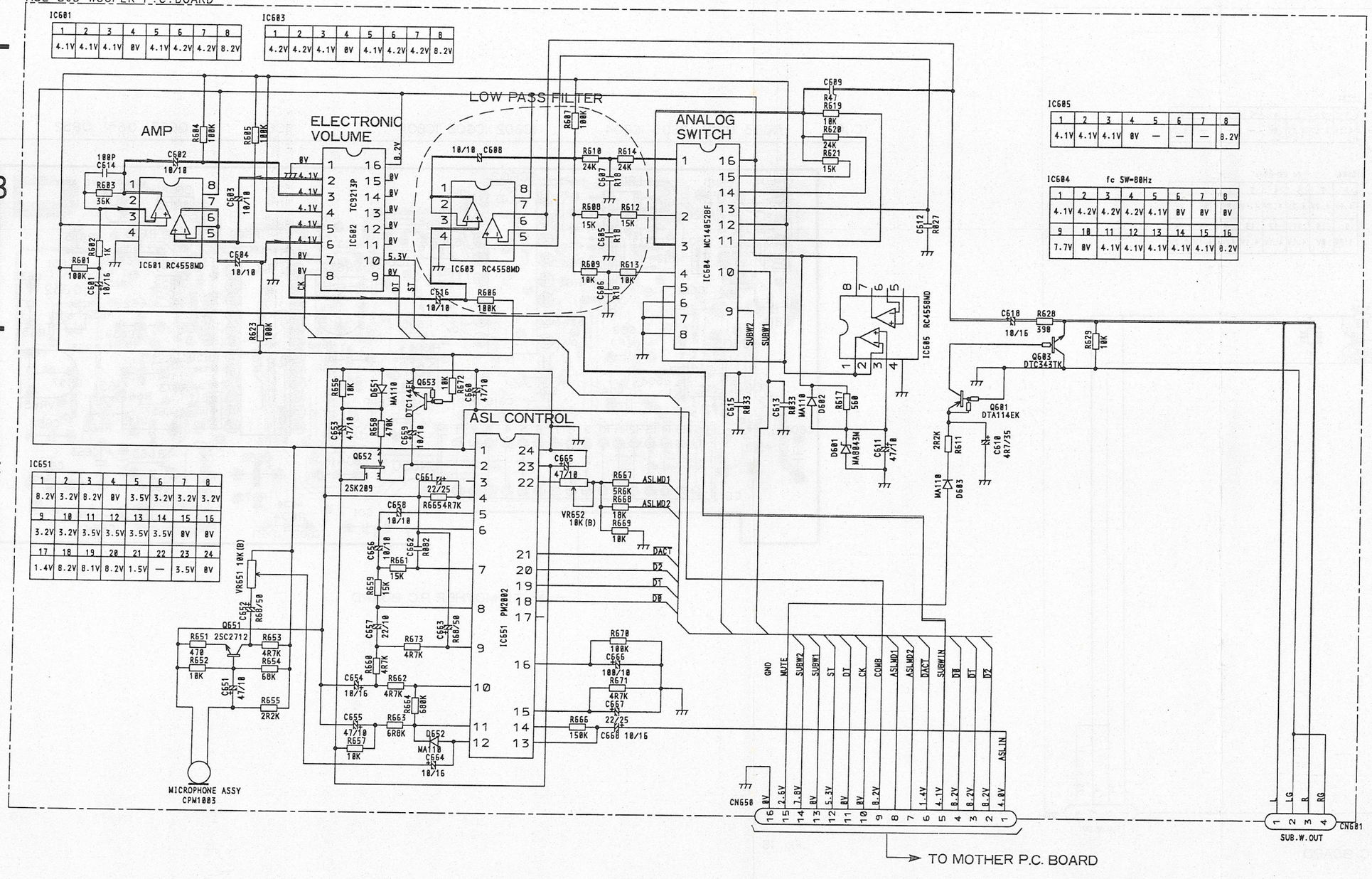

Fig. 19

es a resistor.
tion is made between chip resistors and
tors.

es a capacitor.
tion is made between chip capacitors and
tors.

Decimal points for resistor and capacitor fixed values are expressed as:
2.2→2R2
0.022→R022

IC605

1	2	3	4	5	6	7	8
4.1V	4.1V	4.1V	0V	—	—	—	8.2V

IC604 fc SW=80Hz

1	2	3	4	5	6	7	8
4.1V	4.2V	4.2V	4.2V	4.1V	0V	0V	0V
9	10	11	12	13	14	15	16
7.7V	0V	4.1V	4.1V	4.1V	4.1V	4.1V	8.2V

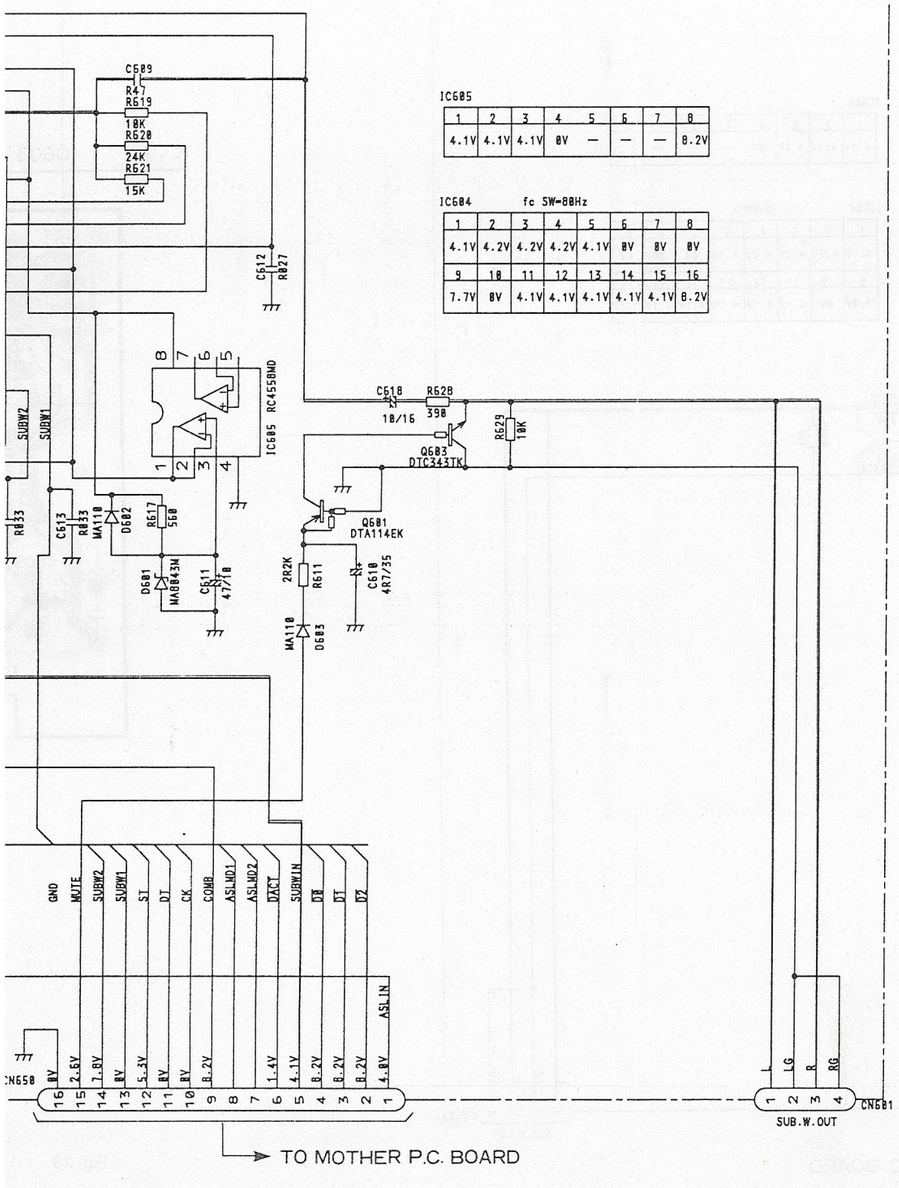

Fig. 19

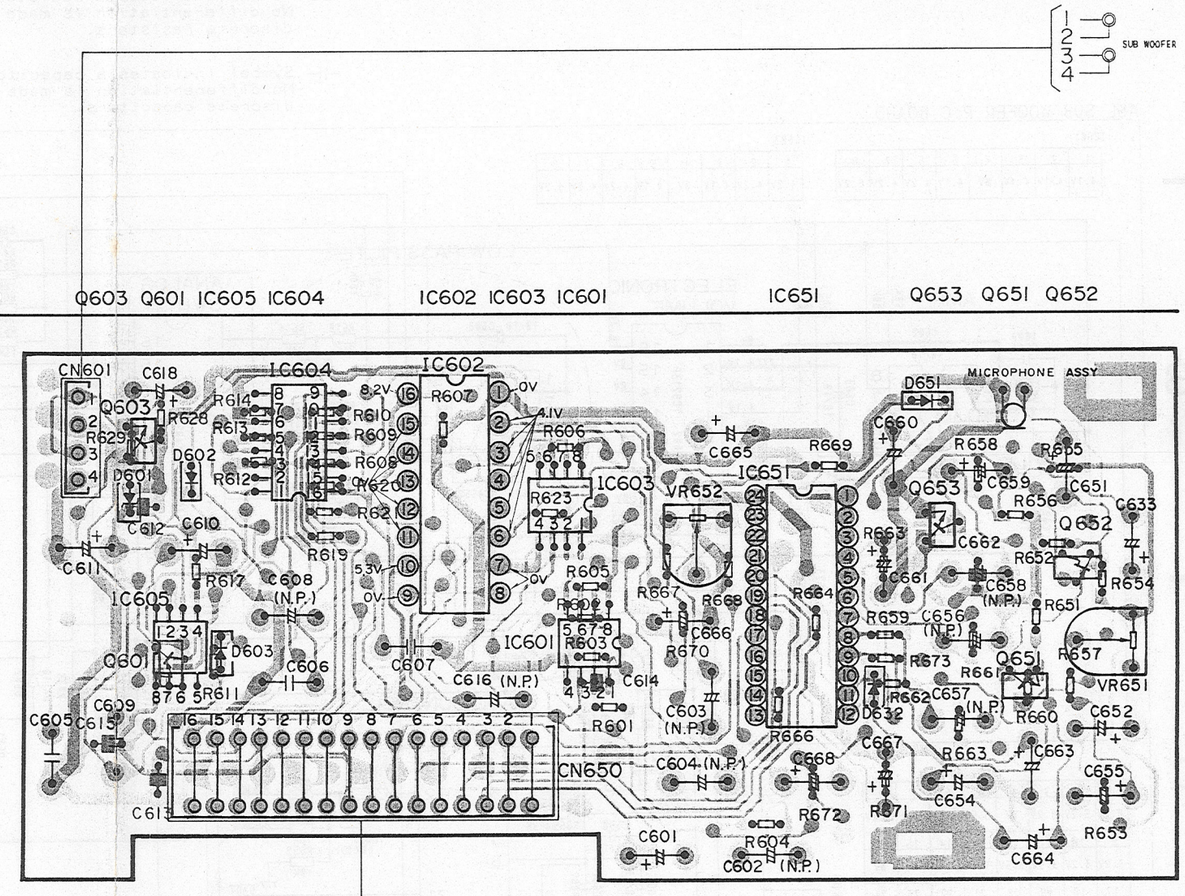

Fig. 20

16.4 FM/AM UNIT

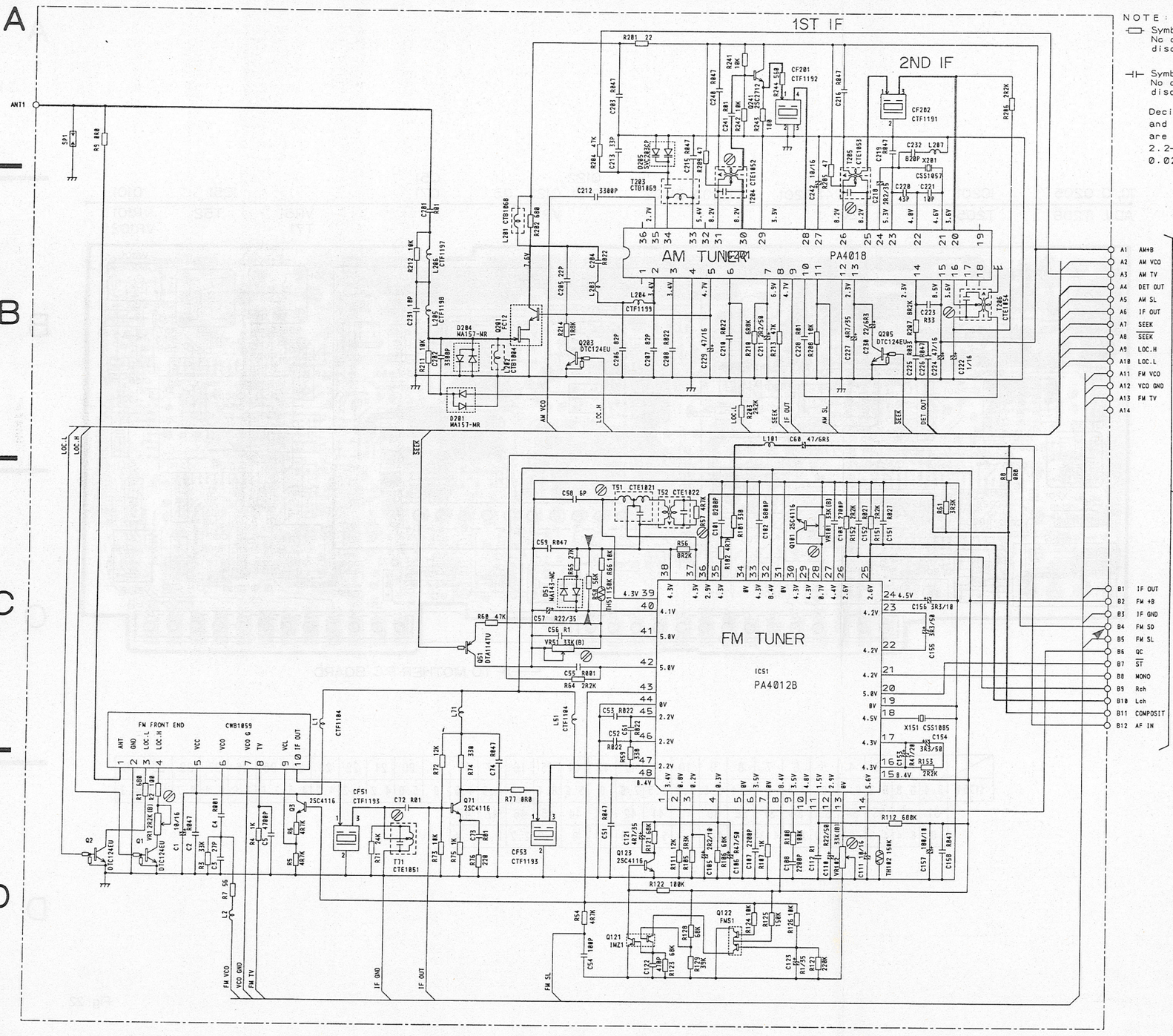

NOTE:

Symbol indicates a resistor.
No differentiation is made between chip resistors and discrete resistors.

Symbol indicates a capacitor.
No differentiation is made between chip capacitors and discrete capacitors.

Decimal points for resistor and capacitor fixed values are expressed as:
2.2→2R2
0.022→R022

IC. Q	Q205	IC201	
ADJ.	T206	T205	T2

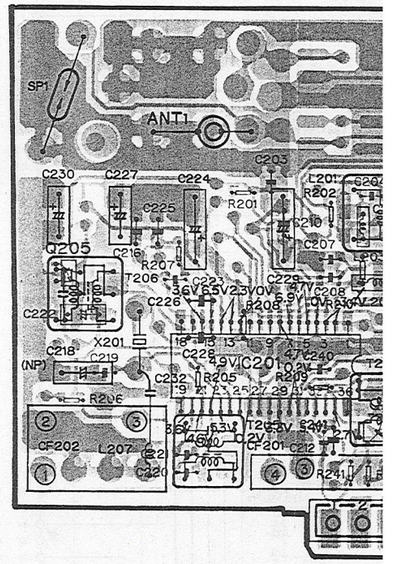

	1	2	3	4
IC51	3.4	0.8	0.2	0.
	31	32	33	34
	0	8.4	4.3	0

Fig. 21

NOTE:

⊏⊐ Symbol indicates a resistor.
No differentiation is made between chip resistors and discrete resistors.

⊣⊢ Symbol indicates a capacitor.
No differentiation is made between chip capacitors and discrete capacitors.

Decimal points for resistor and capacitor fixed values are expressed as:
2.2→2R2
0.022→R022

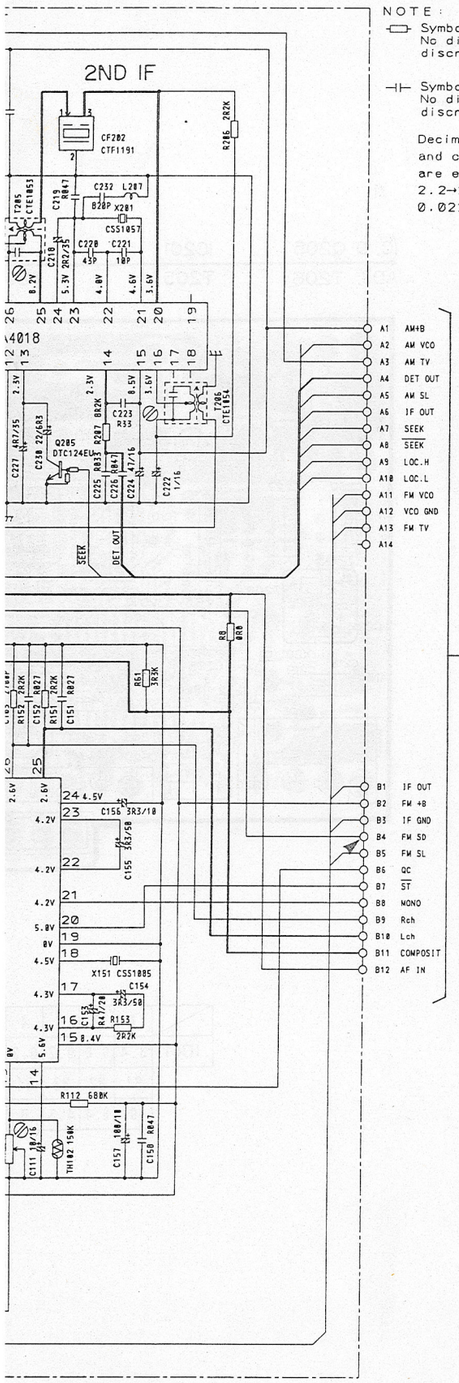

→ TO MOTHER P.C. BOARD

Fig. 21

IC, Q	Q205	IC201	Q241	Q201	Q203	Q1	Q2	Q122 Q121	Q123	Q3	Q51 Q71	IC51	Q101
ADJ.	T206	T205	T204					VR1			VR51 T71	T52	VR101 VR102

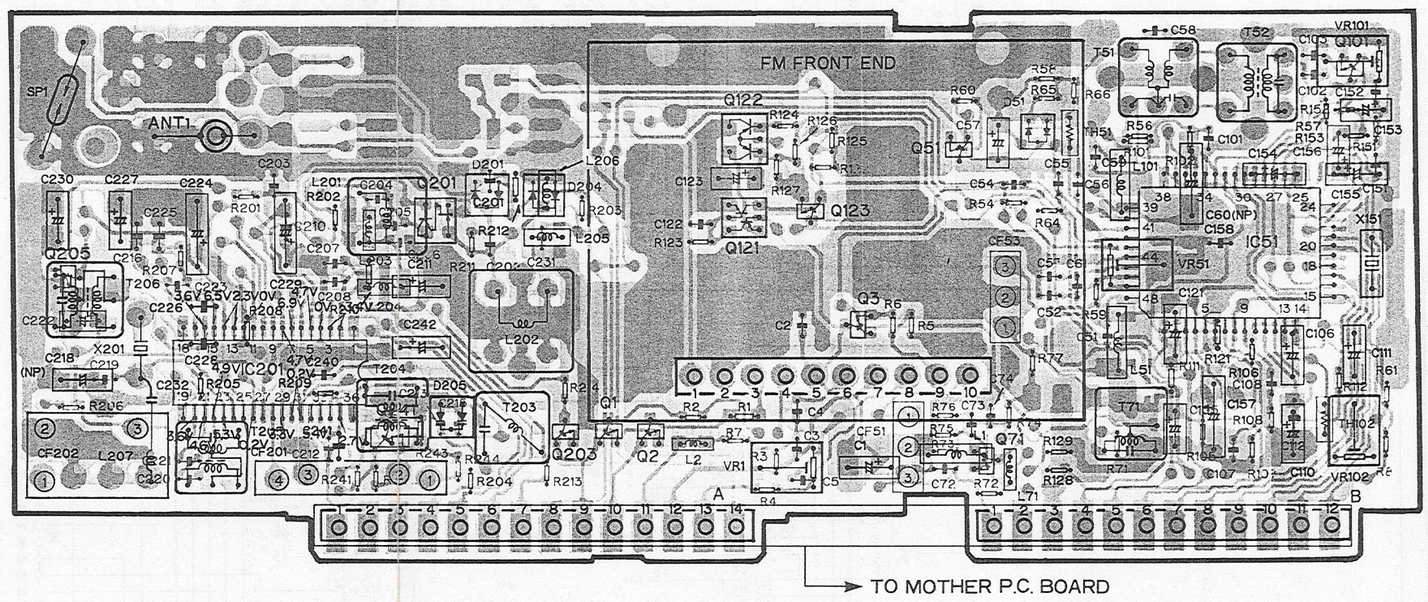

	1	2	3	4	5	6	7	8	9	10	11	12	13	14	15	16	17	18	19	20	21	22	23	24	25	26	27	28	29	30
IC51	3.4	0.8	0.2	0.3	0	3.5	0	8.4	3.5	4.8	1.5	2.9	0	5.6	8.4	4.3	4.3	4.5	0	5.0	4.2	4.2	4.2	4.5	2.6	2.6	4.4	0.7	4.3	4.3
	31	32	33	34	35	36	37	38	39	40	41	42	43	44	45	46	47	48												
	0	8.4	4.3	0	4.3	2.9	4.3	4.3	4.3	4.1	5.0	5.0	—	0	2.2	2.2	2.2	0.4												

(V)

Fig. 22

17. CHASSIS EXPLODED VIEW (1)

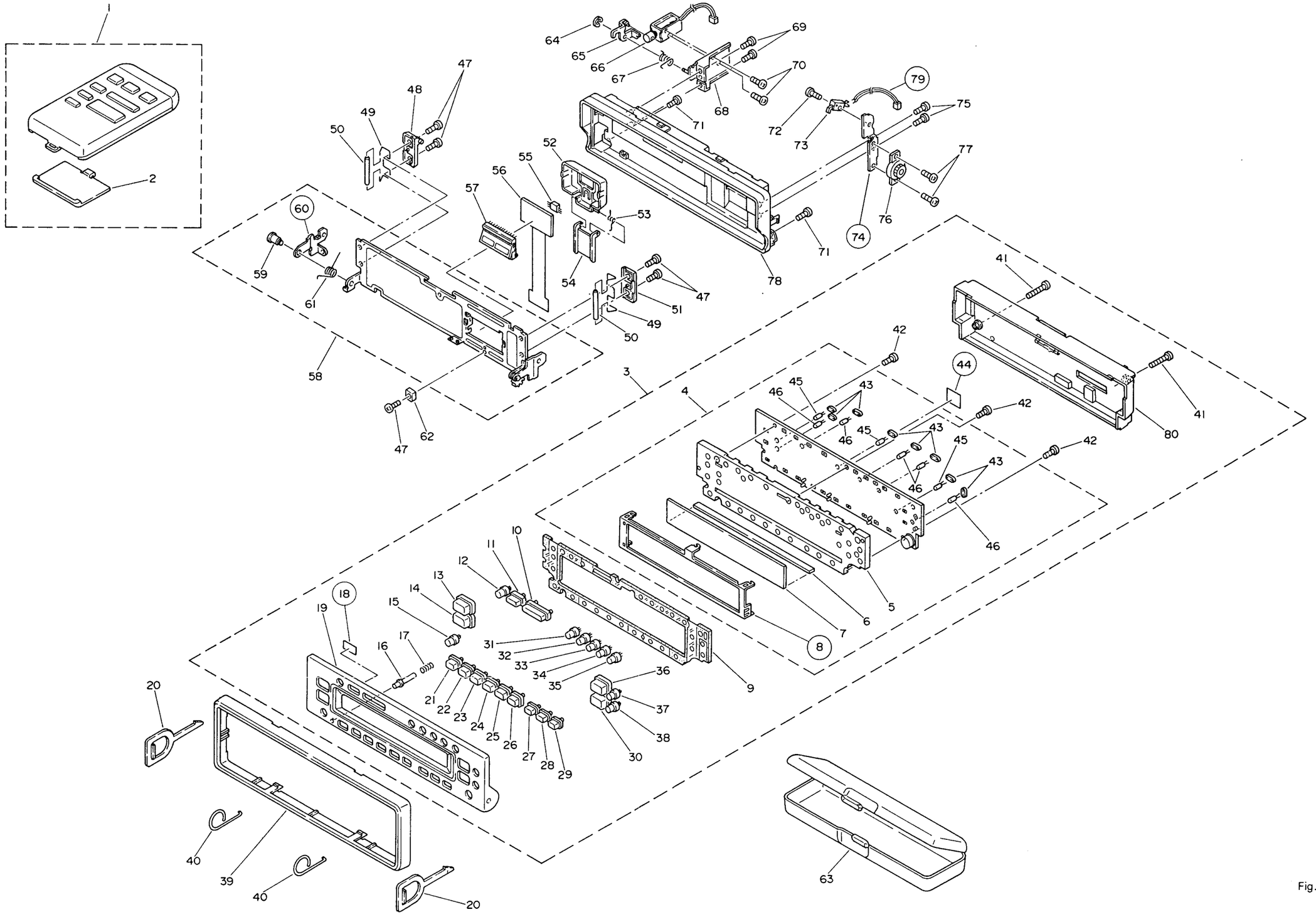

Fig. 23

NOTE:

- *The parts marked with "◉" may need long time to supply and their supply is subject to refuse as the case may be.*
- *Because the parts with encircled number shown on the dismantling drawing are not spare parts, we are unable to supply them in principle.*

•Parts List

Mark	No.	Description	Part No.
	1	Remote Control Assy	CXA3730
	2	Battery Cover	CNS1962
	3	Grille Assy	CXA4028
◉	4	Display Unit	CWS1208
	5	Lens	CNV2647
	6	Connector	CNV2651
	7	LCD	CAW1120
	8	Cover	CNC3515
	9	Cushion	CNM2909
	10	Button(- +)	CAC2749
	11	Button(<>)	CAC2748
	12	Button(LD)	CAC2747
	13	Button(VOL+)	CAC2739
	14	Button(VOL-)	CAC2740
	15	Button(SHIFT)	CAC2874
	16	Button(RESET)	CAC2760
	17	Spring	CBH1376
	18	Insulator	CNM2474
	19	Grille Unit	CXA4116
	20	Handle	CNC1631
	21	Button(1)	CAC2741
	22	Button(2)	CAC2742
	23	Button(3)	CAC2743
	24	Button(4)	CAC2744
	25	Button(5)	CAC2745
	26	Button(6)	CAC2746
	27	Button(ASL)	CAC2757
	28	Button(INT)	CAC2758
	29	Button(BSM)	CAC2759
	30	Button(SRCE)	CAC2756
	31	Button(F1)	CAC2751
	32	Button(F2)	CAC2752
	33	Button(F3)	CAC2753
	34	Button(F4)	CAC2754
	35	Button(CLOCK)	CAC2875
	36	Button(OPEN)	CAC2755
	37	Button(TA)	CAC2876
	38	Button(AF)	CAC2750
	39	Panel	CNS2165
	40	Spring	CBH-865
	41	Screw	BPZ20P100FZK
	42	Screw	BPZ20P060FMC
	43	Bush	CNV2858
	44	Spacer	CNM3085
	45	Lamp	CEL1208
	46	Lamp	CEL1207
	47	Screw	CBA1082
	48	Holder	CNV2654
	49	Spring	CBH1380
	50	Roller	CLA1865
	51	Holder	CNV2655
	52	Cover Unit	CXA4123
	53	Spring	CBH1217
	54	Door	CNV2051
	55	Switch	CSG1033
	56	P.C.Board	CNP2559
	57	Socket	CKS2022
	58	Holder Unit	CXA4405
	59	Screw	CBA1171
	60	Holder	CNC3516
	61	Spring	CBH1216
	62	Guide	CNV2656
	63	Case	CNS2055
	64	Washer	YE15FUC
	65	Arm Unit	CXA3810
	66	Solenoid	CXP1009
	67	Spring	CBH1260
	68	Bracket Unit	CXA2657
	69	Screw	BPZ20P060FMC
	70	Screw	BMZ20P025FMC
	71	Screw	BMZ20P040FZK
	72	Screw	CBA-172
	73	Switch	CSN-078
	74	Holder	CNC3519
	75	Screw	BPZ20P060FMC
	76	Damper Unit	CXA4130
	77	Screw	PMZ20P040FMC
	78	Grille Unit	CXA4119
	79	Connector	CDE3294
	80	Cover Unit	CXA4121

18. CHASSIS EXPLODED VIEW (2)

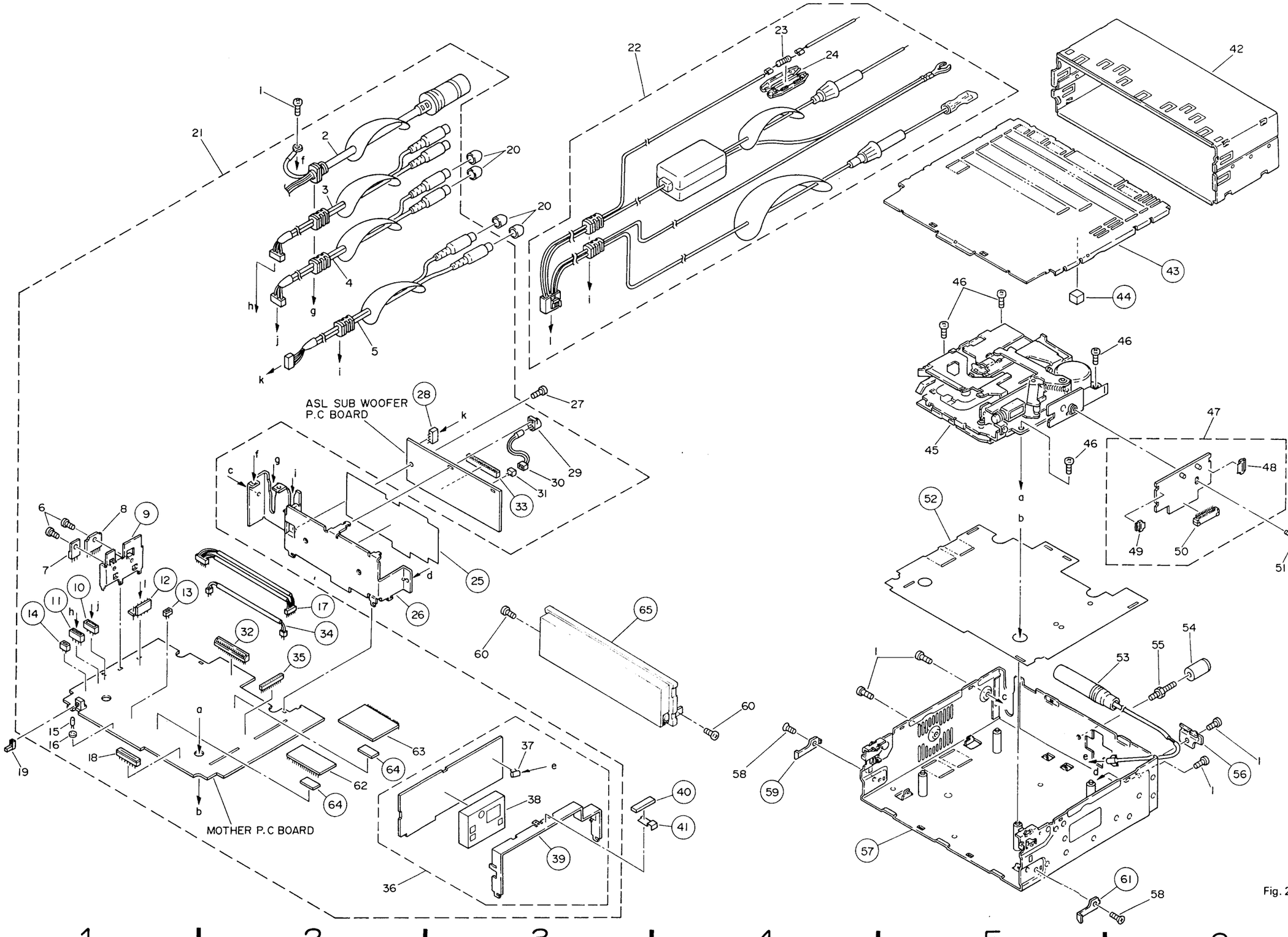

Fig. 24

•Parts List

Mark	No.	Description	Part No.
	1	Screw	BMZ30P050FMC
	2	DIN Connector Cord	CDE3089
	3	Connector(Rear)	CDE3387
	4	Connector(Front)	CDE3388
	5	Connector(Sub Woofer)	CDE3389
	6	Screw	BMZ30P060FMC
	7	Transistor	2SD2352
	8	IC	TA8214K
	9	Holder	CNC3525
	10	Plug	CKS-568
	11	Plug	CKS1224
	12	Plug	CKS-557
	13	Plug	CKS-783
	14	Plug	CKS-566
	15	Lamp	CEL1208
	16	Bush	CNV-724
	17	Connector	CDE3220
	18	Connector	CKS1262
	19	Button(RESET)	CAC2761
	20	Cap	CNV2680
◉	21	Audio Tuner Unit	CWM2621
	22	Cord	CDE3082
	23	Resistor	RS1/2P102JL
	24	Cap	CNS1472
	25	Insulator	CNM2928
	26	Holder	CNC3523
	27	Screw	BMZ26P050FMC
	28	Plug	CKS-684
	29	Holder	CNV2196
	30	Microphone Assy	CPM1003
	31	Plug	CKS1035
	32	Plug	CKS-655
	33	Connector	CKS-674
	34	Connector	CDE2486
	35	Plug	CKS1729
◉	36	FM/AM Unit	CWE1216
	37	Antenna Jack	CKX1010
	38	FM Front End	CWB1059
	39	Holder	CNC3506
	40	Spacer	CNM1429
	41	Holder	CNC2938
	42	Holder	CNC1484
	43	Case	CNB1419
	44	Spacer	CNM3207
◉	45	Cassette Mechanism Assy	CXK1470
	46	Screw	BMZ26P050FMC
◉	47	Deck Unit	CWM2178
	48	Connector	CKS1773
	49	Connector	CKS1771
	50	Connector	CKS1710
	51	Screw	CBA1142
	52	Insulator	CNM3091
	53	Antenna Cable	CDH1117
	54	Bush	CNV1009
	55	Screw	CBA1002
	56	Holder	CNC2742
	57	Cassis Unit	CXA3826
	58	Screw	CMZ30P050FMC
	59	Holder	CNC3521
	60	Screw	BMZ30P030FMC
	61	Holder	CNC3522
	62	HIC	CWV1020
	63	HIC	CWV1025
	64	Cushion	CNM3171
	65	Grille Holder Assy	CXA4027

19. CASSETTE MECHANISM ASSY EXPLODED VIEW

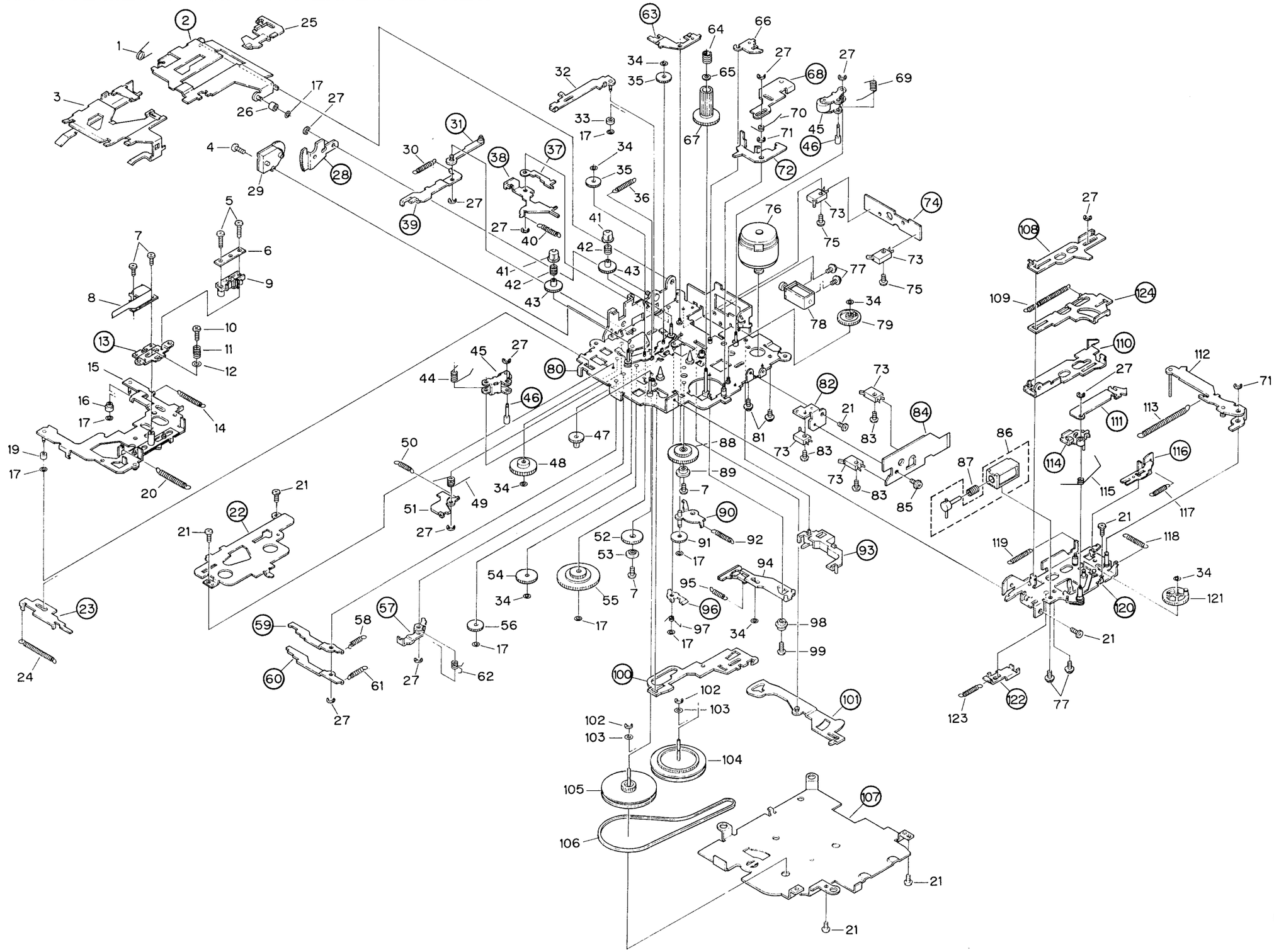

Fig. 25

•Parts List

Mark No.	Description	Part No.	Mark No.	Description	Part No.
1	Spring	EBH1121	41	Collar	ENV1117
2	Arm Unit	EXA1132	42	Spring	EBH1155
3	Cassette Holder	ENC1165	43	Gear	ENV1116
4	Screw	CBA1070	44	Spring	EBH1190
5	Screw	EBA1016	45	Pinch Roller Unit	EXA1043
6	Spring	EBL1011	46	Shaft	ELA1129
7	Screw	HBA-175	47	Gear	ENV1113
8	Head Unit	EXA1088	48	Gear	ENV1111
9	Spacer	ENV1136	49	Spring	EBH1138
10	Screw	BMZ20P025FMC	50	Spring	EBH1142
11	Spring	EBH1145	51	Arm	ENV1138
12	Washer	EBE1005	52	Gear	ENV1109
13	Arm	ENC1155	53	Collar	ELA1161
14	Spring	EBH1187	54	Gear	ENV1110
15	Head Base Unit	EXA1115	55	Gear Unit	EXA1083
16	Roller	ELA1147	56	Gear	ENV1112
17	Washer	CBF1037	57	Arm Unit	EXA1075
18	·····		58	Spring	EBH2002
19	Roller	ELA1146	59	Arm	ENC1152
20	Spring	EBH1131	60	Arm	ENC1151
21	Screw	BMZ20P030FMC	61	Spring	EBH1136
22	Cover	ENC1166	62	Spring	EBH2003
23	Lever	ENC1159	63	Arm	ENC1149
24	Spring	EBH1183	64	Spring	EBH1182
25	Lever	ENV1124	65	Washer	HBF-120
26	Roller	ELA1148	66	Arm	ENV1121
27	Washer	YE15FUC	67	Gear	ENV1142
28	Arm	ENC1174	68	Lever Unit	EXA1078
29	Damper Unit	CXA3242	69	Spring	EBH1189
30	Spring	EBH2007	70	Spring	EBH1153
31	Lever Unit	EXA1079	71	Washer	YE20FUC
32	Lever Unit	EXA1074	72	Arm	ENC1150
33	Roller	ELA1149	73	Switch	CSN1005
34	Washer	CBF1038	74	P.C. Board	ENP1023
35	Gear	ENV1134	75	Screw	CBA-172
36	Spring	EBH1139	76	Motor Unit	EXA1089
37	Arm	ENC1170	77	Screw	PMS20P022FUC
38	Arm	ENC1148	78	Solenoid	EXP1009
39	Arm	ENC1147	79	Gear	ENV1106
40	Spring	EBH1186	80	Chassis Unit	EXA1131

Mark No.	Description	Part No.	Mark No.	Description	Part No.
81	Screw	PMS20P025FMC	106	Belt	ENT1014
82	Bracket	ENC1163	107	Cover	ENC1167
83	Screw	CBA1070	108	Lever	ENC1164
84	P.C. Board	ENP1021	109	Spring	EBH1147
85	Screw	CBA1076	110	Lever	ENC1160
86	Solenoid	EXP1004	111	Arm	ENC1156
87	Spring	EBH1157	112	Arm Unit	EXA1111
88	Gear	ENV1108	113	Spring	EBH1135
89	Collar	ELA1151	114	Clamper	ENV1141
90	Arm Unit	EXA1076	115	Spring	EBH1151
91	Gear	ENV1114	116	Lever	ENC1171
92	Spring	EBH1141	117	Spring	EBH1149
93	Clamper	ENV1140	118	Spring	EBH1146
94	Arm Unit	EXA1090	119	Spring	EBH1148
95	Spring	EBH1169	120	Guide Unit	EXA1100
96	Arm	ENC1153	121	Gear	ENV1118
97	Spring	EBH1140	122	Arm	ENC1157
98	Collar	ELA1162	123	Spring	EBH1158
99	Screw	JFZ20P045FNI	124	Lever	ENC1161
100	Lever	ENC1158			
101	Arm Unit	EXA1099			
102	E Type Washer	CBG1003			
103	Washer	HBF-179			
104	Flywheel	ENV1128			
105	Flywheel	ENV1127			

20. PACKING METHOD

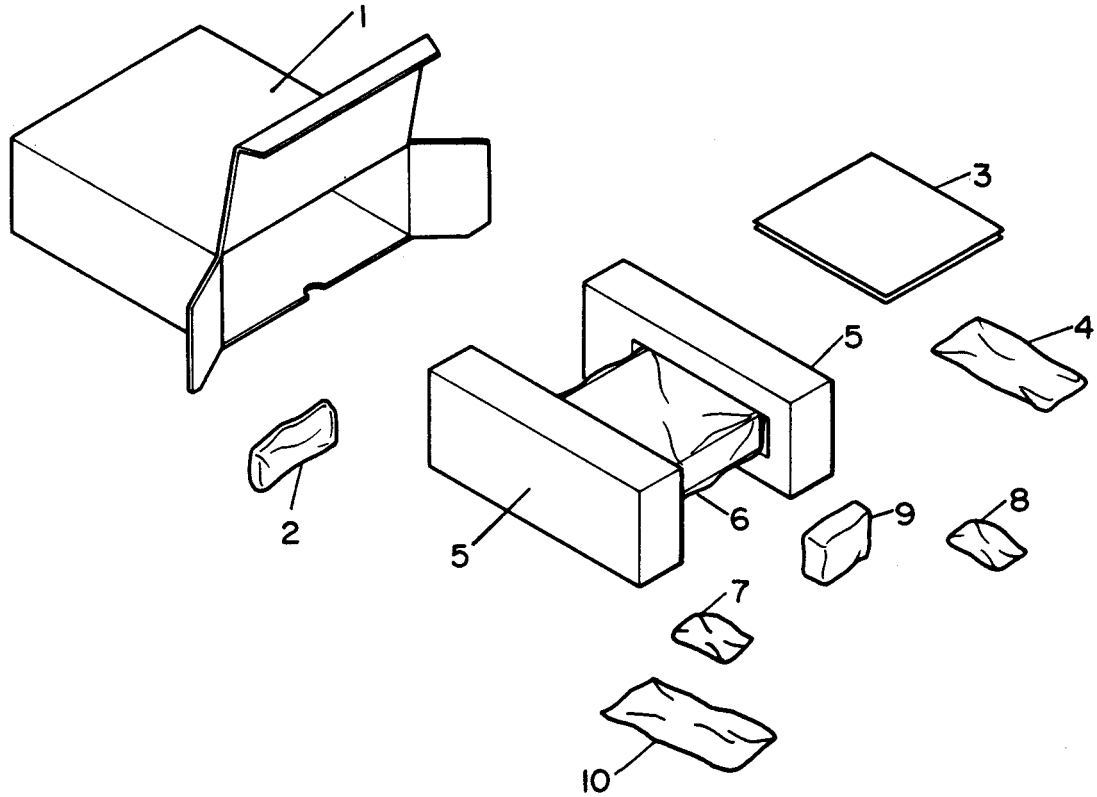

Fig. 26

•Parts List * :Non spare part

Mark No.	Description	Part No.	Mark No.	Description	Part No.
1	Carton	CHG1981	6	Cover	CEG1092
2	Case	CNS2055	7-1	Handle (× 2)	CNC1631
3-1	Owner's Manual	CRD1461	7-2	Spring (× 2)	CBH-865
3-2	Owner's Manual	CRD1462	8	Remote Control Assy	CXA3730
* 3-3	Card	CRY-062	9	Accessory Assy	CEA1473
* 3-4	Caution Card	CRN1007	* 9-1	Battery	CEX1006
* 3-5	Caution Card	CRP1087	9-2	Fastener (Rough)	CNM1716
* 3-6	Passport	CRY1013	9-3	Fastener (Soft)	CNM1717
4	Accessory Assy	CEA1471	10	Panel	CNS2165
4-1	Screw (× 1)	CBA-102			
4-2	Screw (× 1)	CBA1002			
4-3	Strap	CNF-111			
4-4	Bush	CNV1009			
4-5	Nut (× 2)	NF50FMC			
5	Styrofoam	CHP1402			

Owner's Manual

Part No.	Language
CRD1461	English, French, German, Spanish
CRD1462	Swedish, Norwegian, Dutch, Italian, Finnish

21. ELECTRICAL PARTS LIST

NOTE:

- *Parts whose parts numbers are omitted are subject to being not supplied.*
- *The part numbers shown below indicate chip components.*
  Chip Resistor
  RS1/8S □□□J, RS1/10S □□□J
  Chip Capacitor (except for CQS.....)
  CKS....., CCS....., CSZS.....

Unit Number :
Unit Name : FM/AM Unit

MISCELLANEOUS

Mark	Circuit Symbol & No.	Part Name	Part No.
IC	51		PA4012B
IC	201		PA4018
Q	1 2	Chip Transistor	DTC124EU
Q	3 71 101 123	Chip Transistor	2SC4116
Q	51	Chip Transistor	DTA114TU
Q	121	Chip Transistor	IMZ1
Q	122	Chip Transistor	FMS1
Q	201	Chip Transistor	FC12
Q	203 205	Chip Transistor	DTC124EU
Q	241	Chip Transistor	2SC2712
D	51	Chip Diode	MA143-MC
D	201 204	Chip Diode	MA157-MR
D	205	Chip Diode	SVC203CP
L	1 51	Inductor	CTF1104
L	2	Inductor	LPSQR22K
L	71	Inductor	LPSQ3R9K
L	101	Inductor	CTF1126
L	201	Coil	CTB1068
L	202	Coil	CTB1004
L	203	Inductor	LPSQ220K
L	204	Inductor	CTF1199
L	205	Inductor	CTF1198
L	206	Inductor	CTF1197
L	207	Inductor	LAU151K
T	51	Coil	CTE1021
T	52	Coil	CTE1022
T	71	Coil	CTE1051
T	203	Coil	CTB1069
T	204	Coil	CTE1052
T	205	Coil	CTE1053
T	206	Coil	CTE1054
TH	51 102	Thermister	DTH-T204D154K
CF	51 53	Ceramic Filter	CTF1193
CF	201	Ceramic Filter	CTF1192
CF	202	Ceramic Filter	CTF1191
X	151	Ceramic Resonator	CSS1085
X	201	Crystal Resonator	CSS1057
VR	1	Semi-fixed 2.2kΩ	CCP1015
VR	51 101 102	Semi-fixed 33kΩ	CCP1022
SP	1		DSP-201M
		FM Front End	CWB1059

RESISTORS

Mark	Circuit Symbol & No.	Part Name	Part No.
R	1		RS1/10S681J
R	2		RS1/16S101J
R	3		RS1/16S333J
R	4 75 107		RS1/16S102J
R	5 6 54		RS1/16S472J
R	7		RS1/16S560J
R	8 77		RS1/16S0R0J
R	9		RS1/16S0R0J
R	56		RS1/16S822J
R	57		RS1/16S472J
R	58		RS1/16S563J
R	59		RS1/16S331J
R	60		RS1/16S473J
R	61 105		RS1/16S332J
R	64 151 152		RS1/16S222J
R	65		RS1/16S273J
R	66		RS1/16S103J
R	71		RS1/16S243J
R	72		RS1/16S123J
R	73 124 126		RS1/16S103J
R	74		RS1/16S331J
R	76		RS1/16S221J
R	101		RS1/10S331J
R	102		RS1/16S472J
R	106 128		RS1/16S683J
R	108 122		RS1/16S104J
R	111		RS1/10S123J
R	112		RS1/16S684J
R	121		RS1/10S683J
R	123		RS1/16S683J
R	125		RS1/16S154J
R	127		RS1/16S224J
R	129		RS1/16S393J
R	153		RS1/16S222J
R	201		RS1/16S220J
R	202		RS1/16S681J
R	203 206		RS1/16S222J
R	204		RS1/16S473J
R	205 209		RS1/16S470J
R	207		RS1/16S822J
R	208 212		RS1/10S103J
R	210		RS1/10S682J
R	211 241 242		RS1/16S103J
R	213		RS1/16S473J
R	214		RS1/16S182J
R	243		RS1/10S181J
R	244		RS1/16S561J

CAPACITORS

Mark	Circuit Symbol & No.	Part Name	Part No.
C	1 111		CEV100M16
C	2 51 59 74		CKSRYF473Z25
C	3		CCSRCH270J50
C	4 55		CKSRYB102K50
C	5		CKSRYB472K50

Mark	Circuit Symbol & No.	Part Name	Part No.
C	52 53 61		CKSRYB223K25
C	54		CCSRSL101J50
C	56		CKSRYF104Z25
C	57		CSZSR22M35
C	58		CCSRCH060D50
C	60		CEVNP470M6R3
C	72 73		CKSRYB103K25
C	101		CKSRYB822K25
C	102		CKSRYB682K25
C	103		CKSRYB272K50
C	105		CSZS2R2M10
C	106		CEVR47M50
C	107 108		CKSRYB222K50
C	110		CEVR22M50
C	112		CKSYB104K25
C	121		CEV4R7M35
C	122		CKSRYB471K50
C	123		CSZS0R1M35
C	151 152		CKSRYB273K16
C	153		CSZSR47M20
C	154 155		CEV3R3M50
C	156		CSZS3R3M10
C	157		CEV101M10
C	158		CKSRYF473Z25
C	201		CKSRYB103K25
C	202 212		CKSRYB332K50
C	203 215 219		CKSRYF473Z25
C	204 208		CKSRYB223K25
C	205		CCSRCH220J50
C	206 207		CCSRCH820J50
C	210		CKSQYF223Z25
C	211		CEV2R2M50
C	213		CCSRCH330J50
C	216		CKSQYF473Z25
C	218		CEVNP2R2M35
C	220		CCSRCH430J50
C	221 231		CCSRCH100D50
C	222		CSZS010M16
C	223		CKSRYF333Z25
C	224 229		CEV470M16
C	225		CKSQYF333Z25
C	226		CKSQYF473Z25
C	227		CEV4R7M35
C	228 241		CKSQYB103K50
C	230		CEV220M6R3
C	232		CKPYB821K50L
C	240		CKSRYF473Z25
C	242		CEV100M16

Unit Number :
Unit Name : Deck Unit

MISCELLANEOUS

Mark	Circuit Symbol & No.	Part Name	Part No.
IC	251		BA3430FS
IC	301		HA12161FP
Q	251	Chip Transistor	2SC4116
Q	281	Chip Transistor	2SC4116
Q	282 284 286	Chip Transistor	2SB1441JU
Q	283 285	Chip Transistor	2SC3295
Q	301		FMG9
VR	301 302	Semi-fixed 33kΩ (B)	CCP1076

RESISTORS

Mark	Circuit Symbol & No.	Part Name	Part No.
R	251 252 253 254		RS1/10S273J
R	255 256 401		RS1/10S181J
R	257 258		RS1/10S334J
R	259 260		RS1/10S133J
R	261 262		RS1/10S183J
R	263		RS1/10S473J
R	264		RS1/10S333J
R	265 266		RS1/10S224J
R	281		RS1/10S472J
R	282 288 293		RS1/10S473J
R	283 284 285 289 290 294 295		RS1/8S221J
R	286 291 296		RS1/10S103J
R	287 292 307		RS1/10S103J
R	301 302 306 308		RS1/10S223J
R	303 304		RS1/10S561J
R	305		RS1/10S183J
R	309		RS1/10S682J
R	402		RS1/10S270J
R	403		RS1/10S823J

CAPACITORS

Mark	Circuit Symbol & No.	Part Name	Part No.
C	251 252 253 254		CCSQCH331J50
C	255 256	22μF/6.3V	CCH1065
C	257 258		CKSQYB103K50
C	259 260 313	1μF/50V	CCH1072
C	261	100μF/6.3V	CCH1067
C	262		CKSYB103K50
C	281 282	4.7μF/25V	CCH1064
C	301 302	0.47μF/50V	CCH1073
C	303 304 305 306 307 308		CKSQYB222J50
C	309 310 311 312		CKSYB104K25
C	314		CKSYB103K50
C	401		CKSQYB152K50
C	402 404		CKSYB104K25
C	403	6.8μF/25V	CCH1066

Audio Tuner Unit
Consists of • Mother P. C. Board • ASL Sub Woofer P. C. Board

Unit Number :
Unit Name : Audio Tuner Unit

MISCELLANEOUS

Mark	Circuit Symbol & No.	Part Name	Part No.
IC	401		CWV1025
IC	402		UPC4570G
IC	601 603 605		RC4558MD
IC	602		TC9213P
IC	604		MC14052BF
IC	651		PM2002
IC	701		PD4271C
IC	702		CXK5816M-15L
IC	703		TC74HC125AF
IC	704		PD4294
IC	706		S-80734AN-DY
IC	801		CWV1020
IC	851 852		RC2068MD
IC	951		TA8214K
Q	351 352 353 354 355 356 855 856 863 864	Chip Transistor	DTC343TK
Q	358 955	Chip Transistor	DTC114EK
Q	359	Chip Transistor	IMX3
Q	360	Chip Transistor	FMC2
Q	361 362	Chip Transistor	DTC343TK
Q	501 503 651 712 715 803		2SC2712
Q	502	Chip Transistor	2SK208
Q	504	Chip Transistor	2SK208
Q	505	Chip Transistor	2SA1298
Q	506	Chip Transistor	2SC3098
Q	507 702 706 720 805 806		2SC2712
Q	508 704 801	Chip Transistor	DTC124EK
Q	509	Chip Transistor	2SC3295
Q	510	Chip Transistor	DTC124EK
Q	601 728	Chip Transistor	DTA114EK
Q	603	Chip Transistor	DTC343TK
Q	652	Chip Transistor	2SK209
Q	653	Chip Transistor	DTC144EK
Q	701 716	Chip Transistor	DTA124EK
Q	703		2SB1360
Q	705 714	Chip Transistor	DTC114EK
Q	707	Chip Transistor	FMC3
Q	708	Chip Transistor	DTC114TK
Q	709	Chip Transistor	2SC3295
Q	710	Chip Transistor	2SA1162
Q	711		2SB1240
Q	713	Chip Transistor	DTC143TK
Q	717	Chip Transistor	DTA124EK
Q	802	Chip Transistor	2SJ163
Q	804 954	Chip Transistor	2SA1162
Q	807	Chip Transistor	DTC124EK
Q	808	Chip Transistor	DTC314TK
Q	809	Chip Transistor	FMC2
Q	951		2SB772
Q	952 958	Chip Transistor	2SC3295
Q	953		2SD2352
Q	956	Chip Transistor	2SA1162
Q	957	Chip Transistor	2SA1298
D	351	Chip Diode	IMN11
D	401 402	Chip Diode	MA8043H
D	403 404 651 652 737 739 740	Chip Diode	MA110
D	501 502	Chip Diode	MA8027H
D	601	Chip Diode	MA8043M
D	602 603 746	Chip Diode	MA110
D	701	Chip Diode	MA151WK-MT
D	702	Chip Diode	MA151WA-MH
D	718 733	Chip Diode	MA8075M
D	719	Chip Diode	MA8082L
D	720 734 735 953		ERA15-02
D	721	Chip Diode	MA151WK-MT
D	745		ERC04-02FE3
D	952	Chip Diode	MA8056H
L	502 706	Inductor	CTF1114
L	702 703	Inductor	CTF1243
L	701 704	Inductor	LPSQ2R2K
L	705	Coil	CTF1135
TC	701	Trimmer	CCG1002
IB	701		CWW1330
IB	702		CWW1331
IB	703		CWW1332
IB	704		CWW1319
X	701	Crystal Resonator	CSS1011
X	702	Crystal Resonator	CSS1023
X	703	Buzzer	CPV1011
S	701	Switch(RESET)	CSG1012
IL	701	Lamp 14V 40mA	CEL1208
VR	651 652	Semi-fixed 10kΩ (B)	VRTB6VS103
VR	801	Semi-fixed 220kΩ (B)	VRTB6VS224
		Microphone Assy	CPM1003

RESISTORS

Mark	Circuit Symbol & No.	Part Name	Part No.
R	351 352 722 867 868 883 884 953		RS1/10S102J
R	353 354 358 360 374 504 505 508 520 701		RS1/10S102J
R	355 356		RS1/10S563J
R	357 358 363 364 371 372 405 406 703 718		RS1/10S473J
R	361 362 509 511 512 774 794		RS1/10S102J
R	365 366 401 402 518 521 655 710 853 854		RS1/10S222J
R	367 368 668		RS1/10S183J
R	369 370 674 676		RS1/10S393J
R	373 375 747 772		RS1/10S223J
R	377 378		RS1/10S681J
R	407 408 409		RS1/10S223J
R	501 523 652 656 669 771 773		RS1/10S103J
R	502 519 736		RS1/10S472J
R	503		RS1/10S152J
R	506 507 611 804		RS1/10S222J
R	510 601 604 605 606 607		RS1/10S104J
R	513		RS1/10S821J
R	514		RS1/10S182J
R	515		RS1/10S101J
R	516		RS1/10S101J
R	517		RS1/10S331J
R	522 726 743 746 865 866 881 882		RS1/10S223J
R	524		RS1/10S221J
R	576		RS1/10S0R0J
R	602 706 814 958 959		RS1/10S102J
R	603		RS1/10S363J
R	608 612 621 659 661		RS1/10S153J
R	609 613 619 629 657 672 728 738 751		RS1/10S103J
R	610 614 620		RS1/10S243J
R	617		RS1/10S561J

Mark	Circuit Symbol & No.	Part Name	Part No.
R	623 670 713 757		RS1/10S104J
R	628		RS1/10S391J
R	631 632 653 660 662 665 671 673 705 708		RS1/10S472J
R	633 637		RS1/10S0R0J
R	634 635 806		RS1/10S474J
R	636	4.7kΩ	CCN1057
R	644 714 739 740 741 748 749 765 788		RS1/10S473J
R	651		RS1/10S471J
R	654 724		RS1/10S683J
R	658 735		RS1/10S474J
R	663 725 778 779		RS1/10S682J
R	664		RS1/10S684J
R	666		RS1/10S154J
R	667 851 852 871 872		RS1/10S562J
R	675 677		RS1/10S393J
R	702 711 712 742 781 782 783 784 785 792		RS1/10S681J
R	704 769		RS1S221J
R	707 799		RS1/10S681J
R	709		RS1/10S563J
R	715		RS1/10S010K
R	717 962		RS1/10S472J
R	723		RS1/10S124J
R	727 796		RS1/10S473J
R	729 730	10kΩ	CCN1055
R	731 732 733 775 776		RS1/10S472J
R	737 750 752 753 756 758 760 763 764		RS1/10S473J
R	744 745		RS1/10S471J
R	754		RS1/10S823J
R	755 810 811		RS1/10S334J
R	759 787 789 954 956		RS1/10S103J
R	766 770 780 798		RS1/10S473J
R	777 786		RS1/10S682J
R	790 805		RS1/10S473J
R	801		RS1/10S100J
R	793		RS1/10S472J
R	802 951		RS1/10S222J
R	807		RS1/10S563J
R	808 809		RS1/10S272J
R	812		RS1/10S223J
R	815		RS1/10S223J
R	855 856		RS1/10S222J
R	857 858 859 860		RS1/10S133J
R	952		RS1/10S472J
R	955		RS1/2S471J
R	957		RS1/10S393J
R	960		RS1/10S221J
R	961		RS1/10S473J
R	963		RS1/10S223J

Mark	Circuit Symbol & No.	Part Name	Part No.
C	503 524 526		CKSQYB103X50
C	504 506 507 713 715 726 954		CKSQYB473K25
C	505		CEAR47M50LS2
C	508 609		CFTNA474J50
C	509 523 525 527 703 727 728		CKSQYB103K50
C	510		CCSQSL681J50
C	511		CCSQSL101J50
C	512 614 857 858 859 860		CCSQSL101J50
C	601 618 654 801 861 862 869 870		CEA100M16LS2
C	602 603 604 608 656 658		CEA100M10NPLL
C	605 606 607		CFTNA184J50
C	611 651 653 660 665		CEA470M10L2
C	612		CKSQYB273K50
C	613 615		CKSQYB333K25
C	616		CEA100M10NPLL
C	652 663		CEAR68M50LS2
C	655		CEA470M10L2
C	657		CEA220M10NPLL
C	659 666		CEA101M10L2
C	661 667		CEA220M25L2
C	662		CKSQYB823J25
C	701 725 803		CEA101M10LS
C	702		CKSQYB223K25
C	704 714 952 953 959		CEA220M16LS
C	705 708 709		CKSQYB102K50
C	706 707		CCSQCH100D50
C	712		CCSQCH330J50
C	716		CCSQCH330J50
C	717		CKSQYF104Z25
C	722		CEA101M16L2
C	723 809		CKSQYB102K50
C	724		CEA100M16L2
C	729		CKSYB103K50
C	732		CKSQYF154K50
C	747		CEA220M10LS
C	802		CKSQYB223K25
C	804		CEA470M6R3LS
C	805		CEAR22M50LS2
C	807		CKSQYB103K50
C	808		CEA0R1M50LS2
C	851 852 865 866		CEALNP100M16
C	854 856		CKSQYB223K25
C	951		CEA222M16L2
C	956		CEA4R7M35LS
C	957		CEA331M10L2
C	958		CEALNPR47M50

Unit Number :
Unit Name : Display Unit

CAPACITORS

Mark	Circuit Symbol & No.	Part Name	Part No.
C	351 352		CEAR33M50LS2
C	353 354 711		CEA2R2M50LS2
C	355 356		CEA010M50LS2
C	357 358		CEA2R2M50LS2
C	359 360 408 409 664 668		CEA100M16LS2
C	361 362 610 955		CEA4R7M35LS
C	401 402 710		CEA470M6R3LS
C	403		CEA470M10LS
C	501 721		CKSQYB473K25
C	502	4.7μF/16V	CCH1005

MISCELLANEOUS

Mark	Circuit Symbol & No.	Part Name	Part No.
IC	901		PD4285
IC	902 903		LC7582A
IC	904		S-80740AH-B4
IC	905		BX-1393
Q	901	Chip Transistor	2SC4116
Q	902	Chip Transistor	DTC124TU
Q	903	Chip Transistor	DTC143ZU
Q	904 905	Chip Transistor	2SB1132
D	901 902 903 904	905 Chip Diode	MA143-MC
D	912	Chip Diode	MA728-2A

Mark	Circuit Symbol & No.	Part Name	Part No.
L	901	Inductor	CTF1243
X	901		CSS1069
S	901 902 903 904 905 906 907 908 909 910		CSG1043
S	911 912 913 914 915 916 917 918 919 920		CSG1043
S	921 922 923 924 925	Switch	CSG1043
IL	901 902 903 904 905	Lamp 14V 40mA	CEL1207
IL	906 907 909	Lamp 14V 40mA	CEL1208
IL	910 911 912	Lamp 5V 115mA	CEL1201
IL	913 914 915	Lamp 5V 75mA	CEL1206
		LCD	CAW1120

RESISTORS

Mark	Circuit Symbol & No.	Part Name	Part No.
R	901 902 903 904 905 907		RS1/10S471J
R	906 911 916		RS1/10S103J
R	908	470Ω	CCN1054
R	910	470Ω	CCN1056
R	913 918		RS1/10S470J
R	914		RS1/10S223J
R	915 923		RS1/10S104J
R	917 919 920	10kΩ	CCN1055
R	921 924 926		RS1/10S473J
R	922		RS1/10S333J
R	925 931		RS1/10S222J
R	927 929		RS1/10S472J
R	928		RS1/10S103J

CAPACITORS

Mark	Circuit Symbol & No.	Part Name	Part No.
C	901 902 903 904 905		CKSQYB152K50
C	906		CKSQYB103K50
C	907 911 916		CKSQYF103Z50
C	908 909		CCSQSL221J50
C	910		CSZSC220M6R3
C	912 915		CCSQSL331J50
C	913		CSZS4R7M6R3
C	914		CKSQYF223Z50

Unit Number :
Unit Name : Connector P.C.Board

Mark	Circuit Symbol & No.	Part Name	Part No.
D	1 2		F1SR35-100A
S	1 2 3	Switch (LOAD. END. F/R)	CSN1005

Unit Number :
Unit Name : Switch P.C.Board

Mark	Circuit Symbol & No.	Part Name	Part No.
S	1 2	Switch (METAL. PLAY)	CSN1005

Miscellaneous Parts List

Mark	Circuit Symbol & No.	Part Name	Part No.
HD	1	Head Unit	EXA1088
M	1	Motor Unit	EXA1089
SO	1	Solenoid	EXP1009
SO	2	Solenoid	EXP1004
SO	3	Solenoid	CXP1009
S	1	Switch (CSENS)	CSN-078
S	2	Switch (EJECT)	CSG1033

PIONEER
The future of sound and vision.

Service Manual

ORDER NO.
CRT1276

CASSETTE MECHANISM ASSEMBLY

CX-175

NOTE

- This service manual describes operation of the cassette mechanism incorporated in models listed in the table below.
- When performing repairs use this manual together with the specific manual for the model under repair.

Model	Service Manual	Cassette Mechanism Assembly
KEH-M5000SDK/WG KEH-M5000B/EW KEH-M5000QR/ES	CRT1236	EXK1410
KEH-M5001B/XIB	CRT1238	EXK1410
KEH-M5000QR/UC	CRT1272	EXK1410
KEH-8100SDK/WG KEH-8100B/EW KEH-8101B/XIB KEH-8150QR/ES KEH-8100QR/US	CRT1264	EXK1410
KEH-5000ZRN/XIB	CRT1286	EXK1410
KEH-M7000SDK/WG KEH-M7000B/EW	CRT1235	EXK1420
KEH-M7000QR/UC	CRT1237	EXK1420

Model	Service Manual	Cassette Mechanism Assembly
KEH-M7001B/XIB	CRT1238	EXK1420
KEH-M7000QR/CA	CRT1244	EXK1420
KEH-700QR/US KEH-8150QR/CA	CRT1264	EXK1420
KEX-M800SDK/WG KEX-M800/EW, ES, UC	CRT1234	EXK1430
KEX-M801/XIB	CRT1238	EXK1430

PIONEER ELECTRONIC CORPORATION 4-1, Meguro 1-Chome, Meguro-ku, Tokyo 153, Japan
PIONEER ELECTRONICS SERVICE INC. P.O. Box 1760, Long Beach, California 90801 U.S.A.
PIONEER ELECTRONICS OF CANADA, INC. 505 Cochrane Drive, Markham, Ontario L3R 8E3 Canada
PIONEER ELECTRONIC [EUROPE] N.V. Keetberglaan 1, 2740 Beveren, Belgium
PIONEER ELECTRONICS AUSTRALIA PTY. LTD. 178-184 Boundary Road, Braeside, Victoria 3195, Australia TEL: [03] 580-9911
© PIONEER ELECTRONIC CORPORATION 1990
FT MAR. 1990 Printed in Japan

1. DISASSEMBLY

Note: Always use new washer and E washer at the time of reassembling.

• Dismounting the Cassette Holder

1. Remove the three springs.
2. Take off E washer, and then remove the arm unit.
3. Make the claw straight.
4. Shift the cassette holder toward the left and pull it out from above.

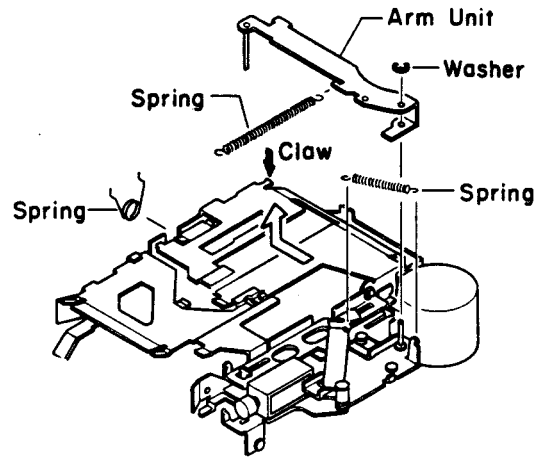

Fig. 1

• Dismounting the Head Unit

1. Remove the two screws, and then remove the guide assy.
2. Remove the two screws, and then remove the head unit.

• Dismounting the Pinch Roller Unit

1. Remove the spring and then remove the pinch roller unit

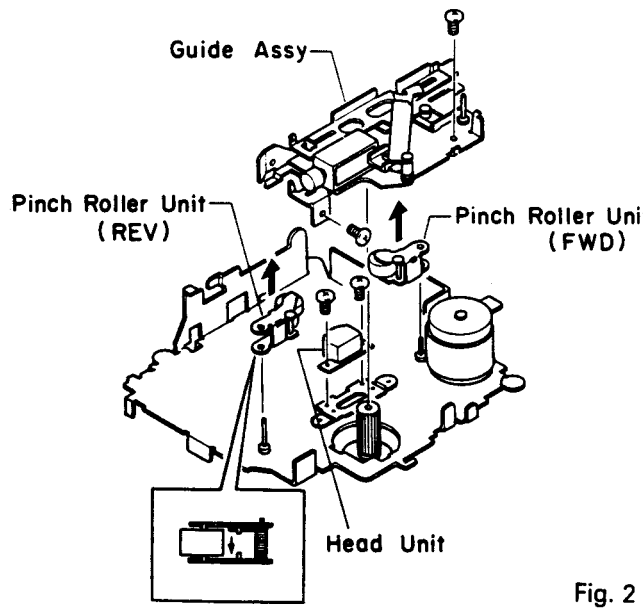

Fig. 2

• Dismounting the Gear (Reel Base)

1. Remove the two screws, and then remove the cover.
2. Remove the collar, and then remove the spring and gear. When removing the collar be careful not to damage the claw on the inside of the collar.

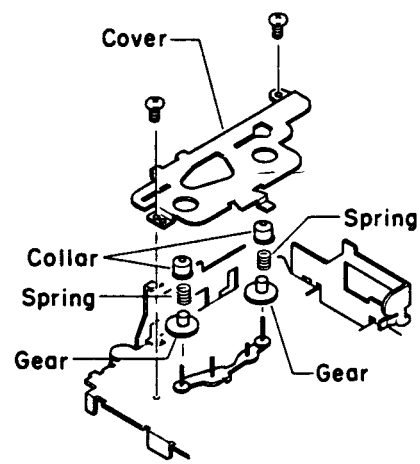

Fig. 3

• Dismounting the Flywheels

1. Remove the two screws, and then remove the cover.
2. Take off E washer. Retain washer properly to ensure it doesn't get lost.
3. Remove the flywheels. Do not mistake the N and R flywheels.

• Dismounting the Motor Unit

1. Remove the two screw, and then remove motor unit.

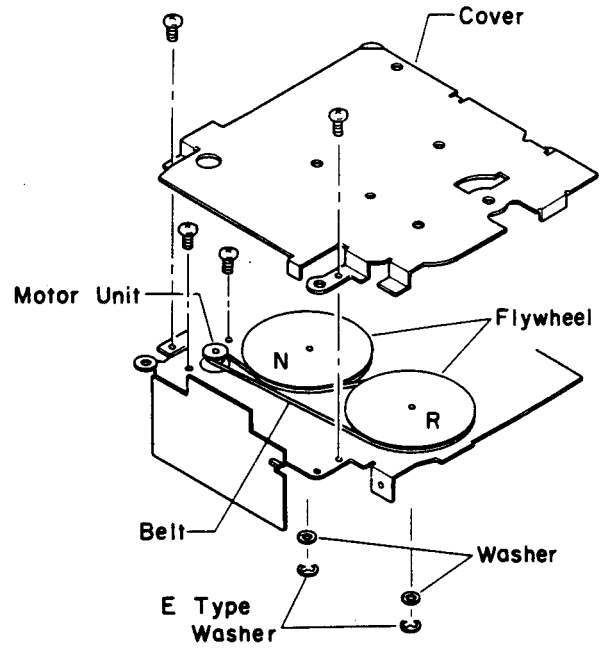

Fig. 4

2. ADJUSTMENT

2.1 AZIMUTH ADJUSTMENT

• To Adjust

1. Play "A" side of NCT-110 (10 kHz, −10 dB). Adjust each screw for maximum output in forward and reverse directions.
2. Play "B" side in forward and reverse directions to confirm adjustment.

2.2 TAPE SPEED ADJUSTMENT

• To Adjust

1. Reproduce NCT-111 (3 kHz, −10 dB). Adjust the semifixed resistor so that frequency counter shows 3,010 Hz (+80 Hz, −40 Hz).

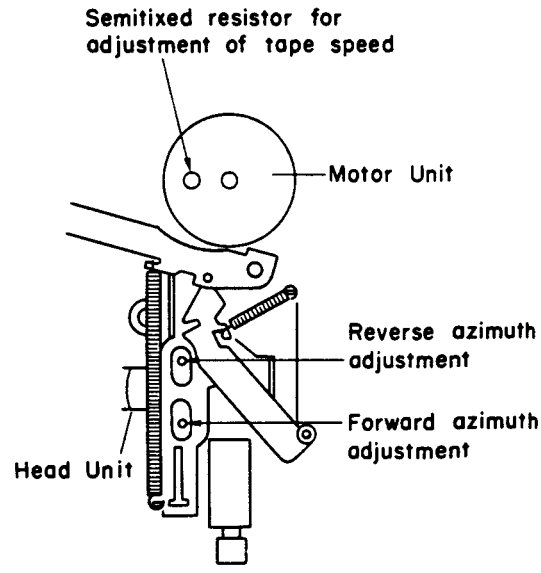

Fig. 5

2.3 CHECK POINTS OF CASSETTE MECHANISM

Confirm the following items when replacing parts of the cassette mechanism.	■ Tape speed deviation: 3,000 $^{+90}_{-30}$ Hz (4.76cm/s $^{+3}_{-1}$ %) Using an NCT-111, measure the speed at the start and end of winding and take the maximum value. If values indicated by the pointer vary considerably, adjust to 70% of the minimun and maximum values. Measuring time shall be 5 – 6 seconds.	■ Wow and flutter: Less than 0.18% (WRMS) Using an NCT-111, measure the wow and flutter at the start and end of winding and take the maximum value. If values indicated by the pointer vary considerably, adjust to 70% of the minimum and maximum values. Measuring time shall be 5 – 6 seconds.
■ Fast forward and rewinding time: 95–115 seconds Using a C-60, set to fast forward and rewind, and measure the time with a stop watch.	■ Winding torque: 37–63g • cm Using a cassette type torque meter (100 g•cm), measure the minimum value while in the play mode. Measuring time shall be 2.5 – 6 seconds.	■ F.F. torque: 70–110g • cm Using a cassette type torque meter (120 g•cm), measure the value when the tape stops in the F.F. mode.
■ REW torque: 70–110g • cm Using a cassette type torque meter (120 g•cm), measure the value when the tape stops in the REW mode.	■ Back tension torque: 0.5–5 kg After setting in the REW mode without loading a cassette tape for 5 minutes, measure the back tension torque in the play mode, using a cassette type torque meter.	■ Cassette loading force: Less than 0.5 kg Push the center of the cassette and measure the force with a tension meter (3 kg).

3. MECHANISM DESCRIPTION

- **Parts Location**

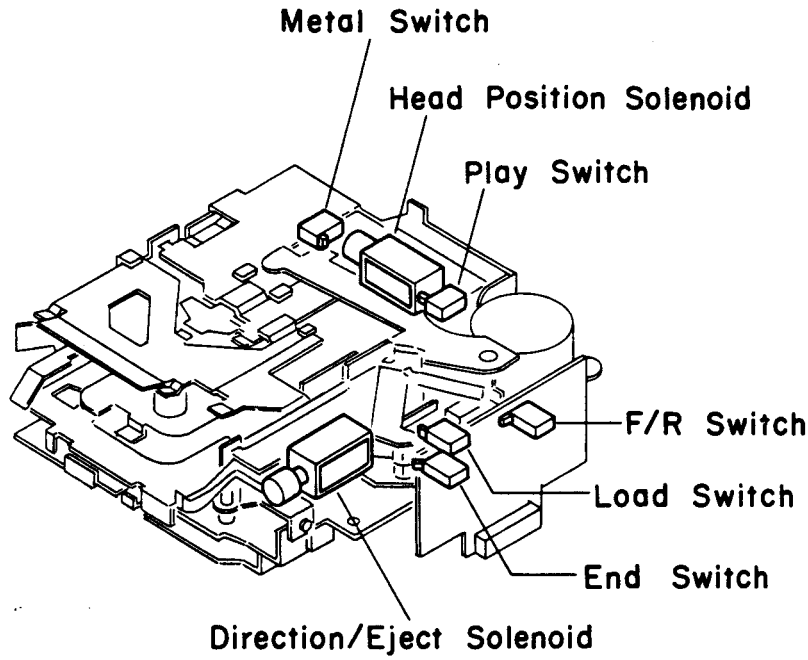

Fig. 6

- **Switch Mode**

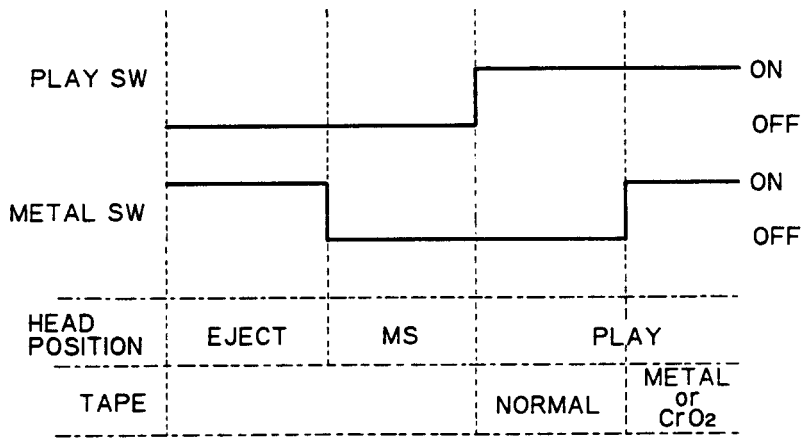

Fig. 7

• ATSC Operation

(1) Loading of a tape cassette causes an arm unit to turn, which causes the load switch to turn ON. With the load switch ON, a motor runs to cause all gears other than FF/REW idler gears to mesh and forward and reverse idler gears rotate in the respective play direction. Now the ATSC state is obtained (Figs. 8 and 9).

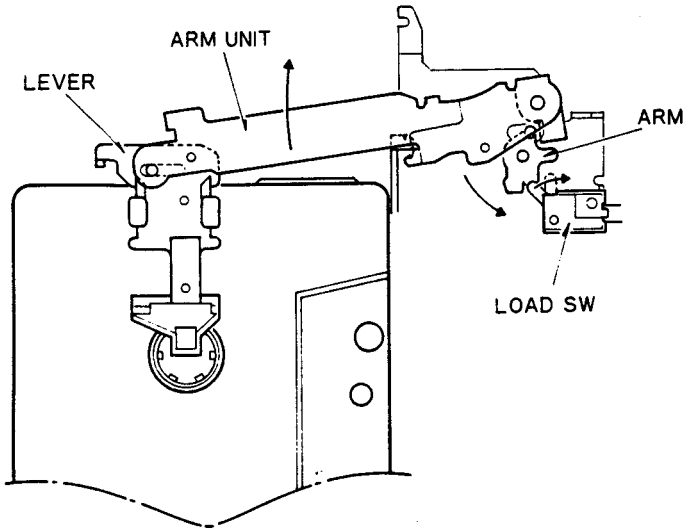

Fig. 8

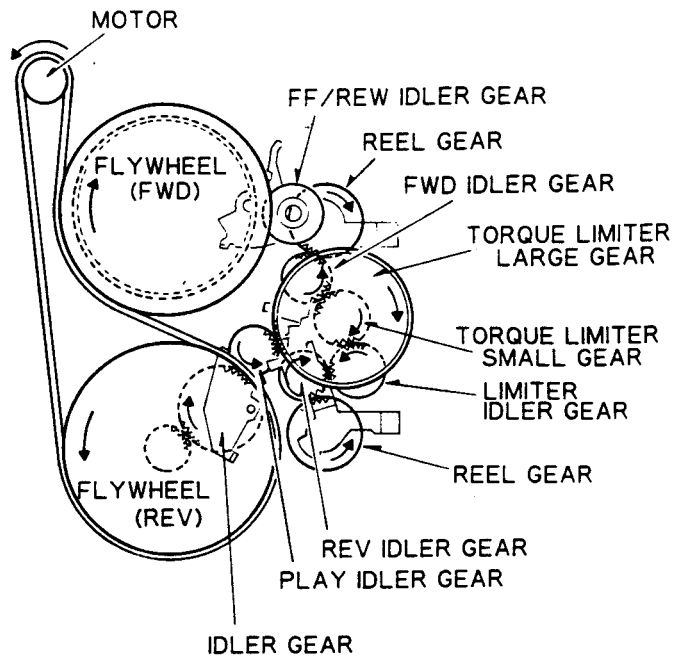

Fig. 9

• Sensing Operation

(1) Sensing arm (felt) and torque limiter bush are held together by means of a sensing arm spring. The felt slides with the torque limiter bush side to keep Point A as a fulcrum at all times while the sensing arm moves along a cam of sensing cam gear because the arm tries to turn counterclockwise. (Fig. 10)

(2) the torque limiter bush stops rotation at ATSC or tape end, and a pin of sensing arm is pushed toward the outermost side by the sensing cam gear. Frictional force between the felt and bush helps the sensing arm holding its position. (Fig. 11)

(3) When the sensing cam gear is turned further, with the sensing arm held in a state shown in Fig. 11, the sensing arm pin is caught by a hook of the cam gear. (Fig. 12)

(4) The sensing cam gear turns further from the state shown in Fig. 12, and the sensing arm moves to turn ON the sensing switch. (Fig. 13)

(5) With the sensing switch ON, the sensing cam gear turns further to release the sensing arm pin from the hook. The pin returns to an original position under a force of the sensing arm spring. (Fig. 14)

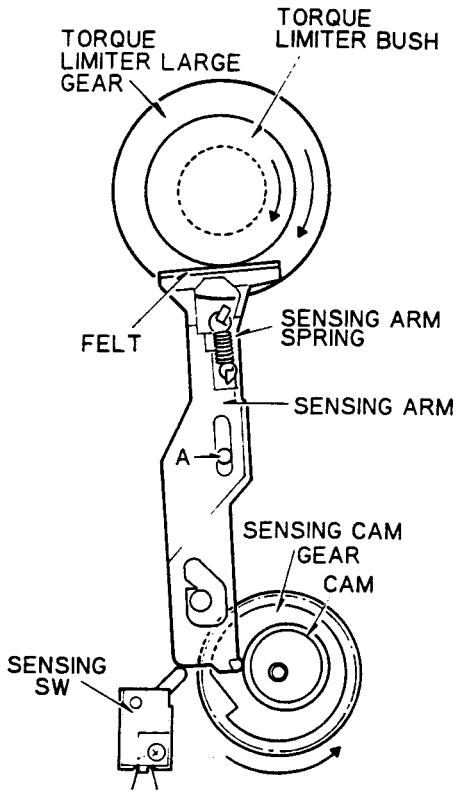

Fig. 10

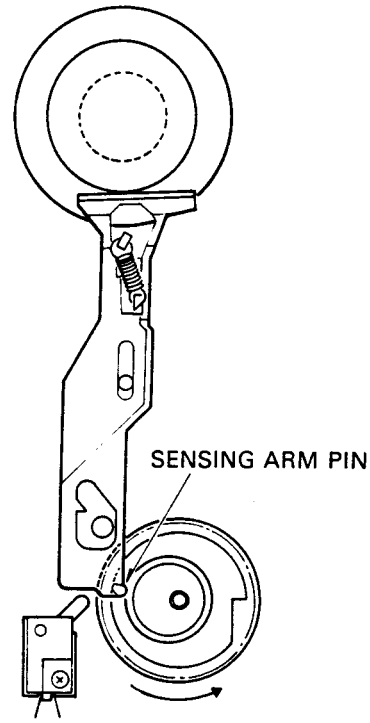

Fig. 11

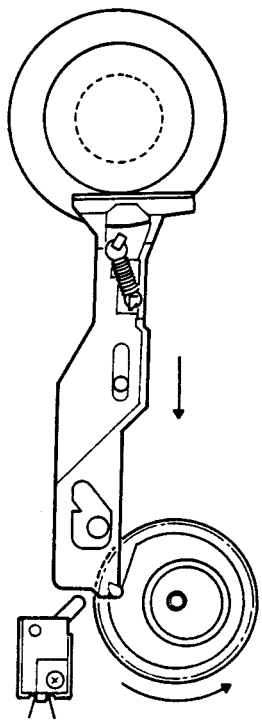

Fig. 12

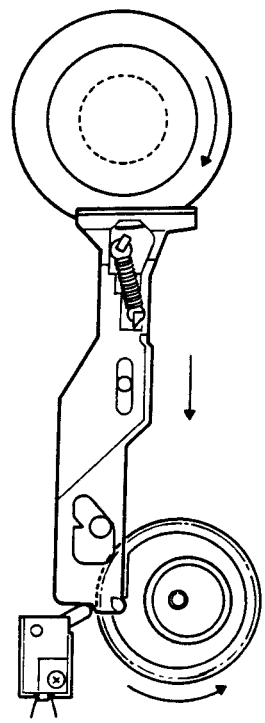

Fig. 13

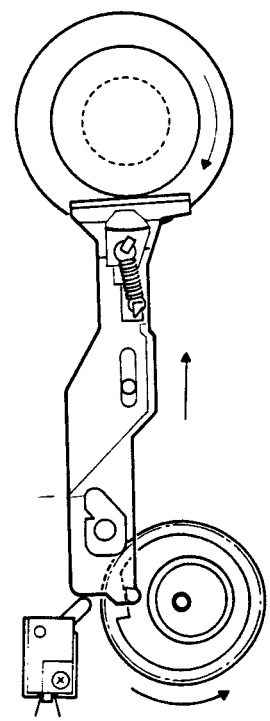

Fig. 14

• **Heading Operation**

(1) A heading solenoid performs attraction in the A direction, causing a lock arm to turn clockwise via L arm, solenoid lever, and arm (A). The cam gear is unlocked. Notch of the cam gear meshes with the second-stage gear for counter-clockwise rotation.
The arm (B) is driven clockwise to begin heading operation. In this heading operation, the arm (B) turns clockwise to cause a lever to move in the B direction.
A head base, which is connected with the lever via spring, operates simultaneously with spring. (Fig. 15)

(2) Fig. 16 shows the state at end of heading operation.
The cam gear rotates to a full limit and the lock arm locks the cam gear. This locking is made to prevent the head base to move backward due to entry of the play lock arm while heading operation is under way.

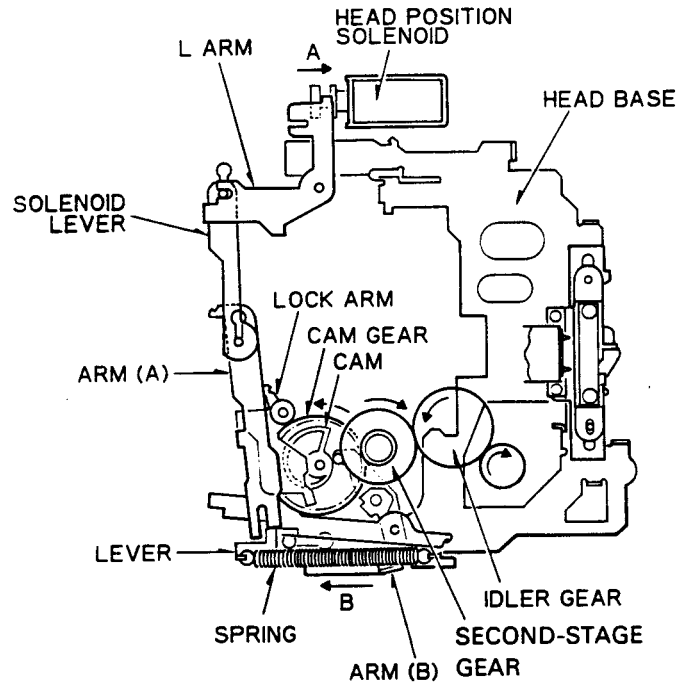

Fig. 15

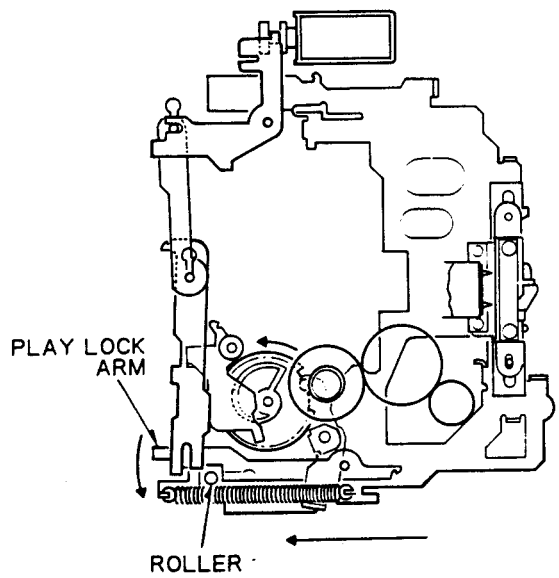

Fig. 16

- **Playing Operation**

(1) FWD play is obtained when the REV idler gear is released from the limiter idler gear. (Fig. 17)
REV play is obtained when the FWD idler gear is released from the torque limiter small gear. (Fig. 18)

FWD PLAY

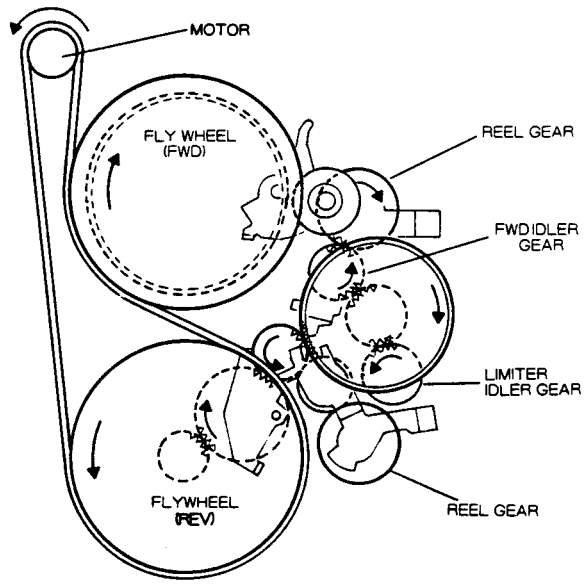

Fig. 17

REV PLAY

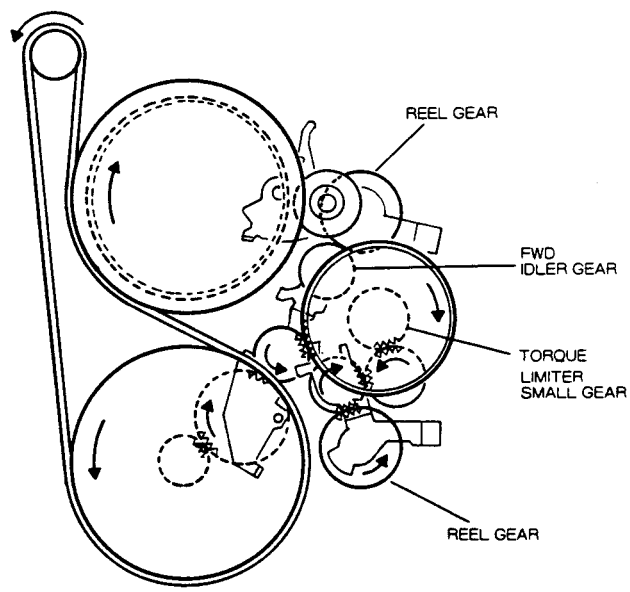

Fig. 18

• **Direction Change**

(1) To change the tape running direction, pull the DIR (EJ) solenoid in the A direction to press the lock arm via solenoid arm to unlock the F/R gear.
Notch meshes to cause counterclockwise rotation to move the F/R lever to the right.
The F/R lever moves the F/R slide lever and F/R arm.
The F/R slide lever performs pinch roller changeover by cam and F/R switch changeover (FWD→ON, REV→OFF).

The F/R arm moves FWD and REV idler plates via the F/R control lever in order to achieve changeover between FWD and REV idler gears.
Note that the F/R arm is connected with a head base, and the roller performs FWD and REV idler gears changeover because it is in the B section of F/R arm when the head is at PLAY or MS.
As the roller is in the C section of the F/R arm when the head is at the release (EJ) position, no changeover is made. In this state, both idler gears of FWD and REV mesh with each other. (Figs. 19 and 20)

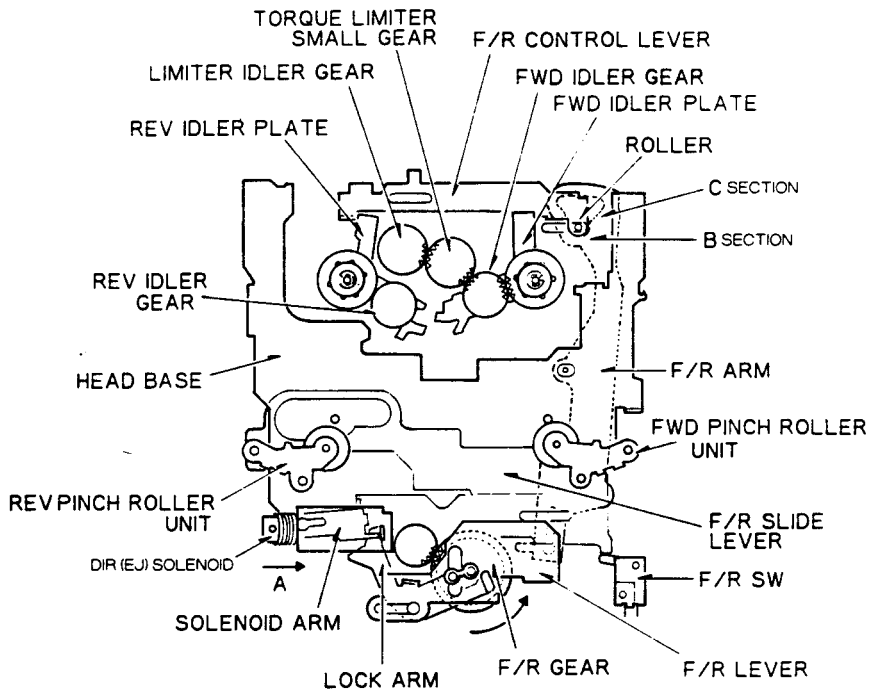

Fig. 19

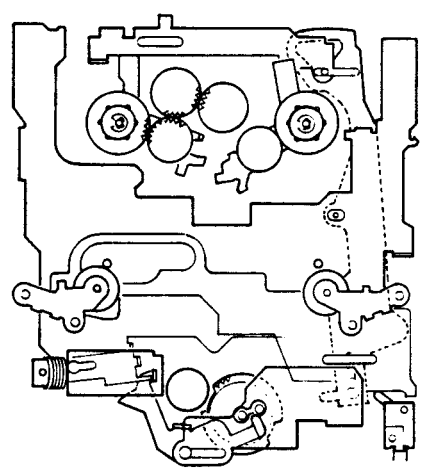

Fig. 20

- **Head Position**

(1) Fig. 21 shows the play state. The heading solenoid is moved in the A direction from the play state to release the play lock arm via L arm, solenoid lever and arm (A).
The head base moves backward until locked with an MS lock arm under a force of return spring and enters the MS state.

· PLAY

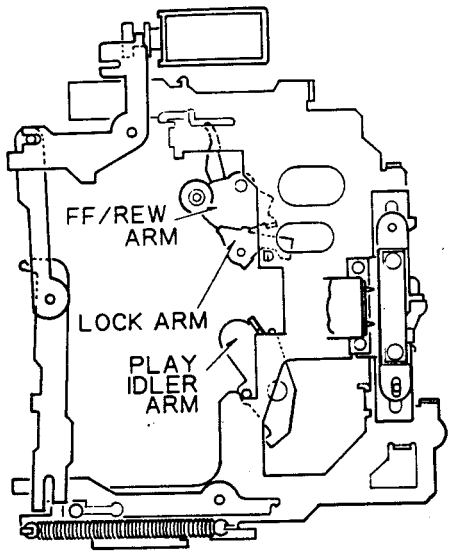

Fig. 21

(2) The heading solenoid is moved in the A direction from the MS state to release the MS lock arm via L arm, solenoid lever, and arm (A).
The head base returns to the release position under a force of return spring.
The head base pushes back the FF/REW arm during return, releasing the FF/REW idler gear from the torque limiter.
The play idler arm is rotated counterclockwise by a cam of the head base to mesh the play idler gear with the torque limiter. (Fig. 23)

The head base rotates the lock arm at a head base bend section during return, thereby unlocking the FF/REW arm.
The FF/REW arm turns counterclockwise and stops at a specified position, allowing the FF/REW idler gear to mesh with flywheel and torque limiter.
The play idler arm turns clockwise to release the play idler gear from the torque limiter. (Fig. 22)

· MS (FF/REW)

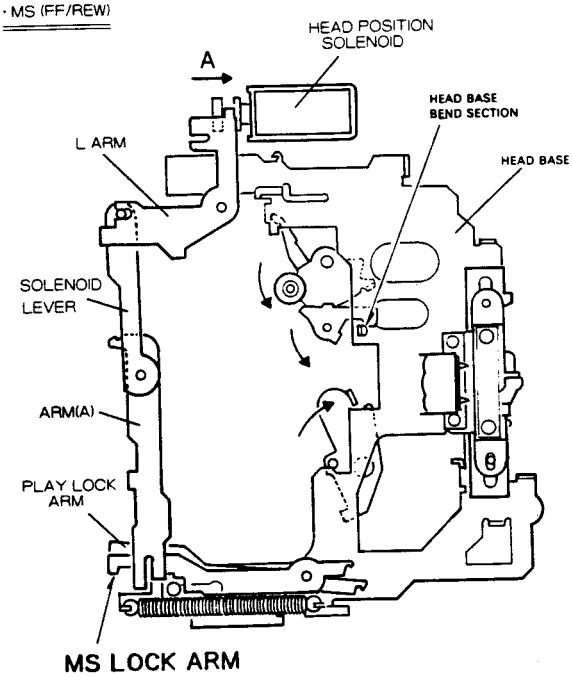

Fig. 22

· RELEASE (EJ)

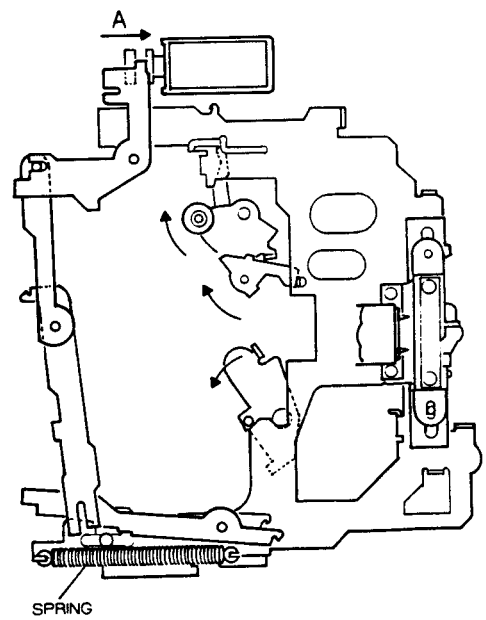

Fig. 23

• **FF/REW Operation**

(1) The play idler gear is released from the torque limiter large gear, and the FF/REW idler gear meshes.
When the REV idler gear is released, the FF state is obtained. The REW state is obtained when the FWD idler gear is released. (The state is opposite between FWD (PLAY) and REV (Reverse) in both cases.)

There are two (upper and lower) torque limiter large gears. Both two FF/REW idler gears mesh simultaneously during FF/REW to generate large torque. (Only one gear meshes during play.) (Figs. 24 and 25)

FF

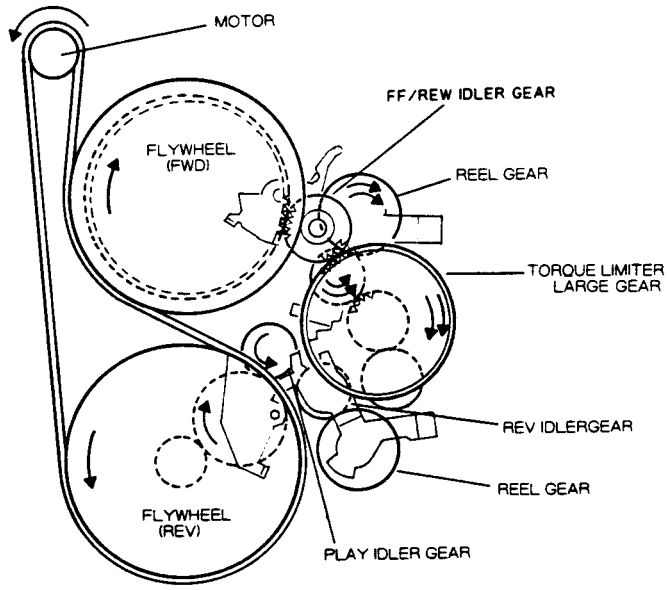

Fig. 24

REW

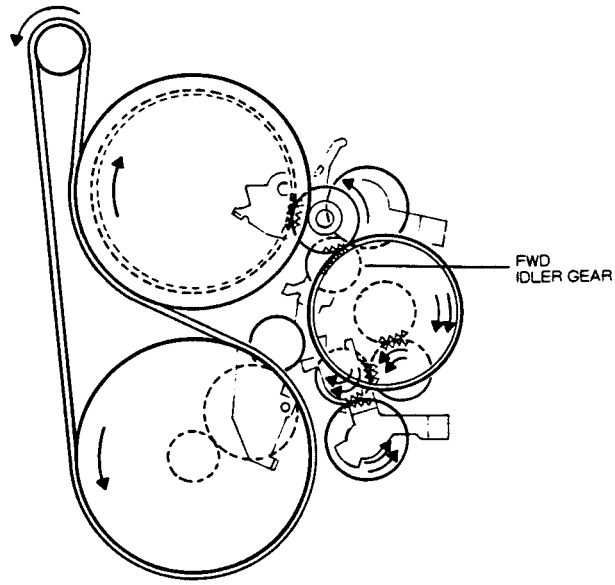

Fig. 25

• **Eject Operation**

(1) The EJ (DIR) solenoid performs attraction to operate the lock arm via solenoid arm, unlocking gear.
The gear then rotates counterclockwise to contact the lever (B) which is moved to the right.
The lever (A) is connected with the lever (B) via spring, and moves simultaneously to the right. A cam of the lever (A) pushes up a cassette arm and the lever (C) enters below a cassette arm roller to maintain the push-up height. (Fig. 26 ~ 28)

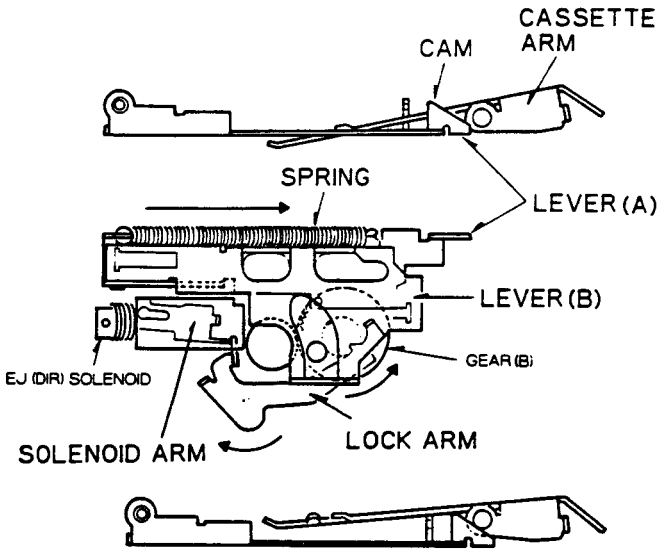

Fig. 26

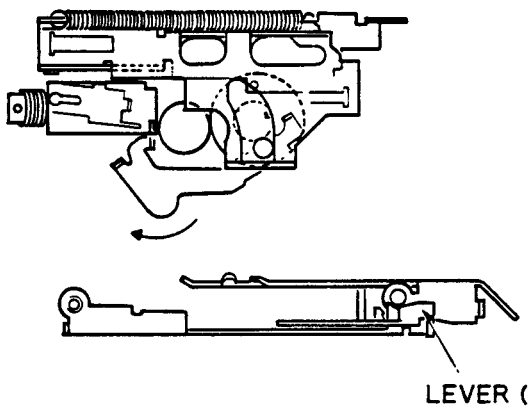

Fig. 27

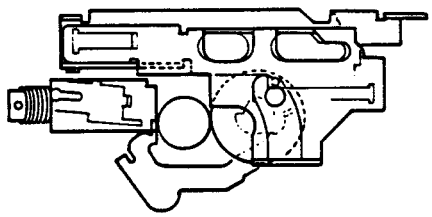

Fig. 28

(2) Upon completion of push-up of a tape cassette, the gear (B) pushes the lever (D) by roller to move it to the left. The lever (D) is connected with an arm unit via spring (D) and pushed out the tape cassette. (Figs. 29 and 30)

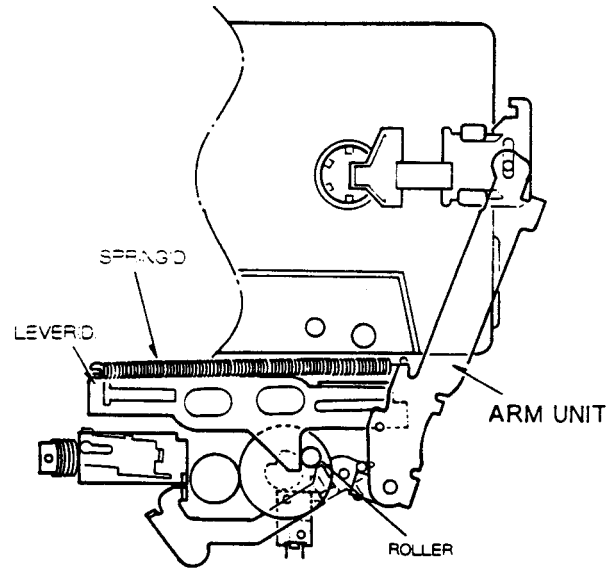

Fig. 29

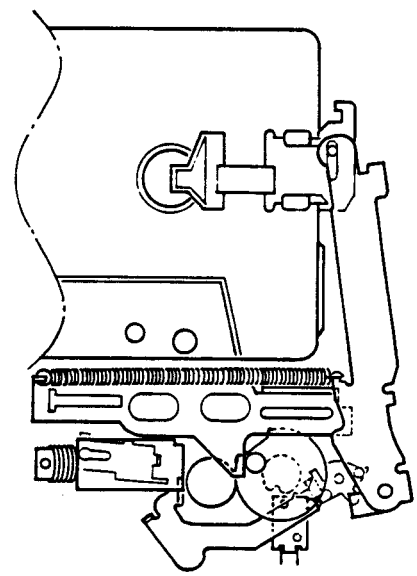

Fig. 30